HEALTH EQUIPMENT NOTE 6

MC0236

Radiodiagnostic Department

DEPARTMENT OF HEALTH AND SOCIAL SECURITY
WELSH OFFICE
SCOTTISH HOME AND HEALTH DEPARTMENT

HMSO £8.50 net

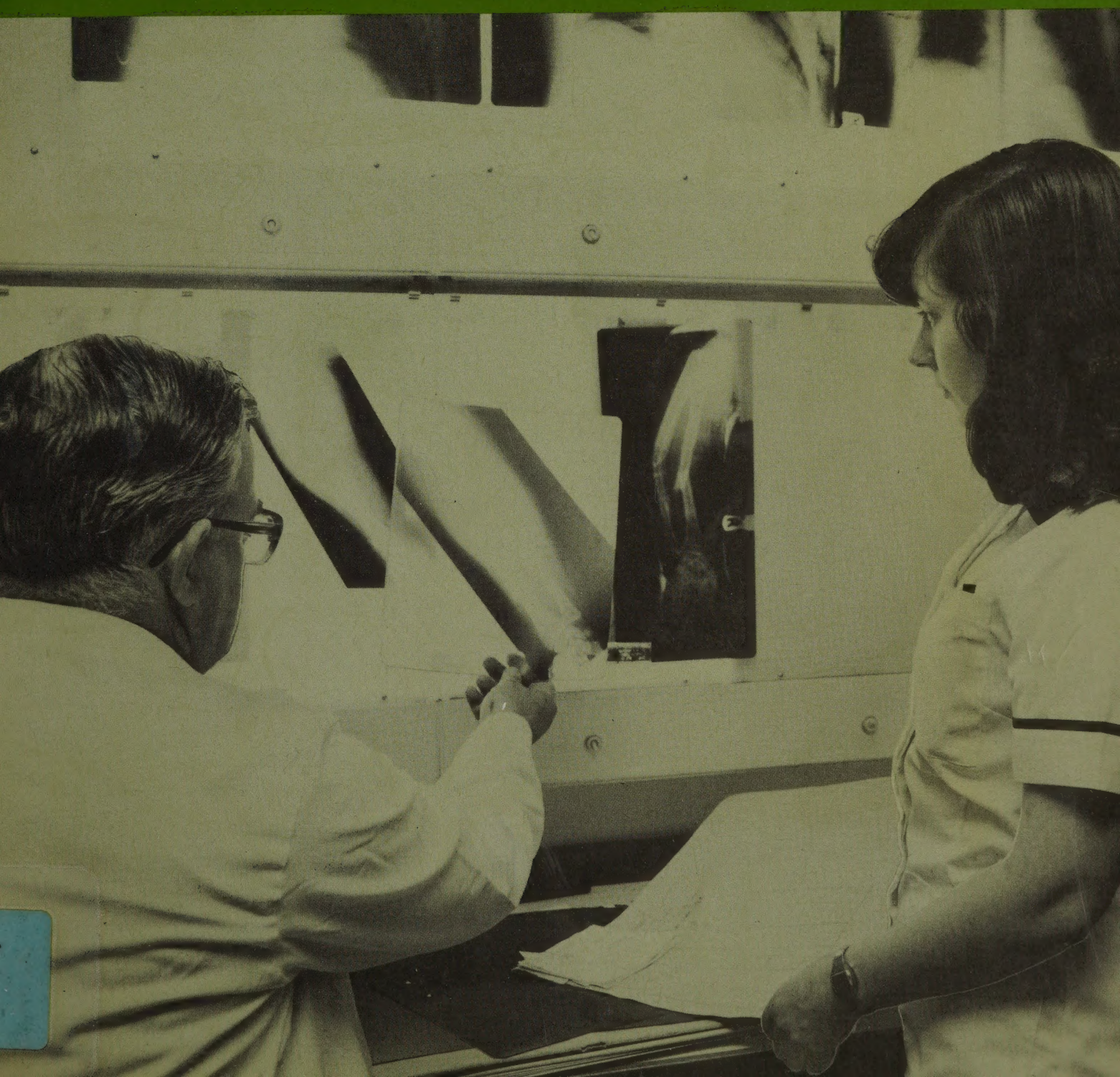

Health (Hospital) Equipment Note No 6 was first issued in October 1962. A revised edition was published in 1975 with a second impression in 1975. This edition (1982) supersedes previous issues.

Contents

		Page
1	Scope	1
2	General considerations on the use of Equipment Notes	1
3	Special considerations in respect of this Note	2
4	Cost guidance	3
5	Equipment Options	4
6	HT Generators	5
7	Radiographic Tables	9
8	Tomographic Equipment	10
9	Chest/erect radiographic equipment	13
10	Fluoroscopic Tables	16
11	General skull radiographic and specialised neuroradiological (pneumoencephalographic) equipment	22
12	Angiographic equipment	26
13	Dental X-ray equipment	38
14	Mammographic equipment	40
15	Paediatric X-ray equipment	43
16	Accident and Emergency patient transfer systems	44
17	Mobile and portable X-ray equipment	47
18	Mobile Image Intensifier equipment	48
19	X-ray Tube Supports	50
20	Processing, film handling and viewing equipment	50
21	Ultrasonic equipment	56
22	Choice of X-ray tube and generator	59
23	Choice of image intensifier/CCTV systems and allied equipment	63
24	Primary radiological functions and primary radiological equipment provision within 2 to 12 room departments	65
25	Provision of primary radiological equipment not within the scope of Chapter 24	75
26	Schedules of equipment: basic accommodation	77
27	Schedules of equipment: additional accommodation	126
28	British Standards	135
29	Acknowledgements	136
	Appendix A: baseline data	137
	TABLES	
A1	Percentage of various examinations types from a general population: detail	138
A2	Percentage of various examinations from a general population: broad bands	138
A3	Work load capacity of various equipment/rooms	139
A4	Percentage breakdown of examinations related to certain age groups	139

725 51055 RAD

Preface

This Equipment Note is presented in a different format to those issued previously for Radiodiagnostic Departments. In particular it contains in Chapters 5 to 23 guidance on the various equipment types (referred to as Options) available when choosing apparatus. For each Option some indication is given as to its suitability for use in particular circumstances. This new approach is particularly important in financial circumstances where the number of completely new radiodiagnostic departments built may be small.

The advice in Chapters 5 to 23 should be helpful in selecting equipment for an expansion of an existing radiodiagnostic department or for replacing old equipment. Also the more detailed description of equipment has allowed the present note to be more specific in its recommendations. Future versions should be easier to revise with the new format and this will allow more regular updating. Advice on the particular equipments which are considered to fall within a particular Option, together with their prices are available from DHSS, and in Scotland from the Common Services Agency.

Chapter 24 provides the broad details of the primary radiological equipment recommended for radiodiagnostic departments of varying sizes without specifying their location within radiodiagnostic rooms. This should ensure maximum flexibility in the detailed design of radiodiagnostic department lay-out following the guidance of the Health Building Note No 6. Radiodiagnostic Department. Additionally the importance of updating and issuing an Equipment Note and Building Note together will be diminished.

Chapter 26 is arranged in a format very similar to the previous Equipment Note but should be less restrictive in application since it represents simply one example of how the primary equipment listed in Chapter 24 can be satisfactorily accommodated within a department of a given size. Also the format of Chapter 26 should allow easier identification of radiological equipment than has previously been possible and, taken together with Chapter 24 is more specific.

Guidance on costs are not, as previously, included because they are so quickly out-dated. However Equipment Cost Allowance Guides (ECAGs) will continue to be sent to Health Authorities in England and Wales on a six monthly basis. Current price ranges for equipment Options will be maintained by DHSS and are available on request.

Advice in a general Equipment Note obviously cannot deal with every local situation. Guidance should therefore be regarded as a base-line to be amended according to the circumstances to which it is applied.

Requests for information on equipments deemed to fall within particular Options and their prices and for information on price ranges for equipment Options should be addressed to DHSS, Scientific and Technical Branch (STB6A), Room H225, 14 Russell Square, London, WC1B 5EP. Advice is of course also available from health authorities which will have access to experts in this field. All enquiries from Scottish health authorities should be directed to the Scientific and Technical Branch, Supplies Division, Trinity Park House, South Trinity Road, Edinburgh, EH5 3SH. For Welsh health authorities The Scientific and Technical Branch, Supplies Division of the Welsh Office at Cathays Park, Cardiff, CF1 3NQ will provide the information.

Library and Information Service
Polytechnic of North London
Holloway Road
London N7 8DB

Holloway Road, N7 8DB
(Telephone 01-607 2789)
Ext 2100

PN 7753536 7

WITHDRAWN
POLYTECHNIC OF NORTH LONDON
CLASS No. 725 51055 RAD
ACC. No. 7753536
011 3207816
17 NOV 1982

1 Scope

1.1 This Equipment Note gives guidance on the equipment required for a radiodiagnostic department. It is intended to be read in conjunction with Health Building Note No 6 and the statutory requirements listed therein. Any subsequent safety regulations appropriate to this department will need to be taken into account. The Building Note relates to the design and planning of radiodiagnostic departments where the normal radiological techniques common to both general and teaching hospitals are used. The Equipment Note is not concerned with therapeutic radiology.

1.2 The Health Building Note No 6 gives guidance on a method of calculating the number of radiodiagnostic rooms required to serve a given population on a District basis irrespective of the size and use of such rooms. The size of a department is defined in terms of its number of radiodiagnostic rooms. The Building Note does not give guidance on rooms for special procedures, eg those for highly specialised complex radiological procedures more appropriate to specialised centres (eg Regional Cardio-thoracic and Neuro-surgical centres). Such rooms where provided are regarded as additional to those provided by virtue of the calculation noted above. Any room used for ultrasonic examinations is also regarded as additional. This Equipment Note generally follows the same philosophy.

1.3 This Equipment Note gives guidance on the provision of radiodiagnostic departments with 2 to 12 radiodiagnostic rooms. It also gives guidance on the provision of ultrasonic equipment and on equipment suitable for Accident and Emergency use. Whereas guidance is given on the type of apparatus suitable for special procedures, detailed equipment schedules for rooms devoted to such complex radiological procedures are not provided. No guidance is given for radioisotope or thermographic imaging equipment although it is recognised that such apparatus may be located in radiodiagnostic departments. Some advice has however been published, eg documents 'Radioisotope Services – A Design Guide DHSS 1973' and 'Radioactive Isotope Service Working Party Report Scottish Home and Health Department 1968'. Also because at the time of publishing this Note the design of CT scanners was changing so rapidly and the criteria for their provision was not sufficiently definitive, no guidance is included for this type of apparatus.

1.4 In Health Building Note No 6 guidance on the design of radiodiagnostic rooms is such as generally to ensure that every room is sufficiently flexible in its design characteristics that virtually any equipment for any function can be installed within it. This should allow final decisions on equipment to be installed and to a large extent room function, to be taken relatively late in the planning cycle so that choice of equipment of the most modern design is not inhibited at an early stage by building criteria. This Equipment Note gives guidance on the radiological functions most appropriate to departments of various sizes and the type and numbers of equipment most appropriate to undertake those functions. Finally, an example is given for each department size of how the recommended functions and equipments could be incorporated into the number of rooms available.

2 General considerations on the use of equipment notes

2.1 Equipment Note No 1 (Equipping a Hospital Building) provides an introduction to the series of departmental Equipment Notes, advice on their application, and guidance on the task of preparing equipment schedules for individual building projects. This departmental Equipment Note is intended to be used within the general planning framework set out in Hospital Equipment Note No 1 and in the manner described therein. The equipment listed in Chapters 26 and 27 of this Note is classified into four groups:

Group 1: Items (including engineering terminal outlets) supplied and fixed within the terms of the Building Contract.

Group 2: Items which have space and/or building construction and/or engineering service requirements and are fixed within the terms of the Building Contract but supplied under arrangements separate from the Building Contract.

Group 3: As Group 2 but supplied and fixed (or placed in position) under arrangements separate from the Building Contract.

Group 4: Items supplied under arrangements separate from the Building Contract, possibly with storage implications but otherwise having no effect on space, building construction or engineering service requirements.

It is recommended that these classifications be used in all stages of planning.

3 Special considerations in respect of this note

3.1 The equipment detailed in this Note is regarded as suitable for the department(s) dealt with in Health Building Note No 6. Equipment guidance has been given so that it can be applied to departments of varying sizes serving from 2 to 12 radiodiagnostic rooms and of varying designs within the context of the Building Note. Additionally, guidance is given on equipment for some special procedures, ultrasonic examinations, Accident and Emergency work and theatre work.

3.2 In the case of radiodiagnostic rooms and general rooms such as offices and waiting accommodation, where the equipment requirements will vary with the size of department, separate column lists are shown according to the number of radiodiagnostic rooms in the department.

3.3 For recurring rooms such as toilets, offices and the like, equipment is listed for one room and will require to be multiplied by the number of such rooms included in a project.

3.4 For those rooms which frequently occur in common form throughout health buildings the equipment listed is based on the Common Activity Spaces Building and Equipment Note Vol 1 (in draft at the time of publication).

3.5 For standard rooms, not materially affected by the size of the department, eg reporting rooms, the equipment is listed for one room. Planning requirements may, however, justify more than one such room or a variation in the published standard in larger departments.

3.6 It is realised that the equipment requirements in particular departments may differ from the recommendations because of the nature of work undertaken and the techniques employed; and some variations will often be necessary within the Basic Lists. As indicated in *Equipment Note No 1, Section V,* the requirements will need to be examined in consultation with the head of the department or main users.

3.7 Some minor items have been grouped under general headings and these will be given aggregated cost allocations in arriving at the cost guide figures. This has been done to avoid a detailed listing of relatively inexpensive small items and to afford a degree of flexibility in their choice.

3.8 Throughout the schedule, for the sake of uniformity, reference to dispenser paper towels are associated with holder, sack, free standing. Suitable adjustments will need to be made where linen towels are to be used. Similarly with soap dispensers where bars of soap are preferred.

3.9 In all cases metric measurements have been quoted wherever possible.

3.10 It is for individual health authorities to make rules about smoking in health buildings under their control and management (see Departmental Health Circular HC (77)3). Smoking in clinical and waiting areas is undesirable and bans on smoking in these areas can be successfully introduced in hospitals and health premises where medical and nursing staff have co-operated to enforce them. Some patients who do not smoke become distressed and discomforted by the presence of tobacco smoke. In this Equipment Note no provision has been made for the supply of ash-trays.

3.11 Activity Data Base

A full list of all the relevant Activity Space Data Sheets and Activity Unit Data Sheets will be listed in Chapter 4 of the Health Building Note No 6 – Radiodiagnostic Department.

3.12 Damage by equipment to buildings

Many items of equipment are potential causes of recurring damage to the fabric of NHS buildings and other equipment. Damage can be minimised not only by incorporating protective materials in building structure but also by ensuring that the equipment selected is designed to eliminate, as far as practicable, those features which are liable to cause damage. Particular attention is drawn to BS4322/68 which sets out recommendations for the buffering of hospital vehicles such as trolleys and refers less specifically to other categories of equipment. Precautions should also be taken to prevent damage caused by projections from stationary equipment.

3.13 Early co-operation with the architect and designers is essential.

3.14 Some fixed items of equipment (Group 1) have already been mentioned (and costed) in the Building Note. Reference should be made, however, to the Building Note Part V Engineering Services for further information on the mechanical services and electrical installation. It is particularly important that before purchasing equipment requiring services there should be adequate consultation to ensure compatability. Structural elements, floor coverings, non-specialised heating and lighting fittings and similar items which are basic to any building are not included in the Equipment Note.

3.15 There are a number of technical requirements for the supply and installation of radiological equipment detailed in the current edition of the DHSS document 'Technical Conditions for the Supply and Installation of Radiological Apparatus: TRS' (available from DHSS).

4 Cost guidance

4.1 No cost guidance is given in this Note because costs rapidly become out-dated. However guidance in the form of Equipment Cost Allowance Guides based on prices ruling at the time will continue to be promulgated by the Department for departments of the sizes dealt with in this Note. Information on the make-up of such costs, on the current price ranges for equipment Options described in Chapter 5 to 23 and on the cost of particular equipments considered to fall within these equipment options will be available from the Department (see Preface for the address from which such information is obtainable).

4.2 In using Equipment Cost Allowance Guides, the considerations referred to in *Section IV* of Equipment Note No 1 together with paragraph 2.1 of this Note, should be borne in mind.

4.3 The Standard Equipment Scheduling System provides a computer based room catalogue and room library with each room identified by a computer room code number (see paragraph 26.2). All equipment within a specific room or activity space is identified by means of the National Supply Vocabulary Code, Group, item cost and description. The total equipping cost of the items within the room is provided together with a cost limit.

4.4 The data base of the Standard Equipment Scheduling System should be consulted where a basic room needs to be modified to meet local requirements. The system offers a wide range of rooms and departments and is fully explained in the Standard Equipment Scheduling System Users Guide.

4.5 Equipment Cost Allowance Guides include the cost of installation of equipment into a prepared site/room. They do not include the cost of pre-installation work to prepare a site and it should be noted that such costs can be substantial.

4.6 The Cost Guides do not take into consideration the possibility of obtaining, nor the possible advantages of a package deal when acquiring specific equipments.

5 Equipment options

5.1 Introduction

Chapters 6 to 23 give guidance on the various types of equipment available when choosing equipment for a particular purpose. The types of equipment are referred to as 'Options'. Options are given and described for all major equipment categories and for each Option some indication is given as to its suitability for use in particular circumstances. Each Option has been assigned an abbreviation to indicate its main category, eg 'Gen' for HT Generators. Options of the same main category have been distinguished alphabetically, starting at 'A' for the simplest and cheapest and progressing through the alphabet as the Options become more sophisticated and expensive. For equipment from a particular supplier Option A will be the cheapest, but this will not always be the case if equipments from a variety of suppliers are considered. This is particularly evident with generators eg a single phase generator (Gen A) from one supplier may be more expensive than a basic three phase generator (Gen C) from another. However the progression implied by the alphabetical ordering will generally apply.

In every case the composition of an Option is defined at least in so far as is necessary to ensure that sufficent detail is provided for a general compilation of the cost to be assigned in compiling the Departmental Equipment Cost Allowance Guide. However a greater detail is given in the Schedules in Chapter 26.

Since Options are described in general terms, a specific equipment may not fully meet the composition of any one but the Option into which it falls should nevertheless be generally obvious for the great majority of equipment on the market. Advice on the equipments which are considered to fall within a particular Option, together with prices, is available (see Preface).

Some of the equipment Options described will not appear in any of the equipment lists for radiodiagnostic departments in Chapters 24 and 26. The reason will usually be evident in the general comments on such Options, eg some may be regarded as justifiable only as a regional or subregional facility.

5.2 Major categories of equipment

Options are described for each of the following major categories of equipment:

Category	*Abbreviations used for Options*	*Chapter*
HT Generators	Gen	6
Radiographic tables	RT	7
Tomographic equipment	Tom	8
Chest/erect radiographic equipment	Ch	9
Fluoroscopic Tables	Fl	10
General skull radiographic and specialised neuroradiological (pneumo-encephalographic) equipment	Sk	11
Angiographic equipment	Ang	12
Dental X-ray equipment	Den	13
Mammographic equipment	Mam	14
Paediatric X-ray equipment	Paed	15
Accident and Emergency patient transfer equipment	A & E	16
Mobile and portable X-ray equipment	Mob	17
Mobile Image Intensifier equipment	Mob I	18
X-ray Tube Supports	TS	19
Processing, film handling and viewing equipment	Proc	20
Ultrasonic equipment	Ult	21

In addition guidance on the choice of X-ray tubes and generator and of image intensifier/cctv systems is given in Chapters 22 and 23.

5.3 Optional extras

Where 'Optional extras' are suggested for any equipment, this should be taken to mean that the items so listed are regarded as reasonable in some but not all circumstances. Some justification may therefore be required for their provision and hence they will not be included in Departmental Equipment Cost Allowances.

5.4 Equipment assemblies

In Chapters 24, 25 and 26, equipment is listed in the form of Options. Obviously in combining equipment Options into an equipment assembly for a particular radiological purpose or for a particular radiodiagnostic room, eg a fluoroscopic table Option with a generator Option, the Options comprising the assembly must be compatible and preferably from one supplier. In general, a satisfactory assembly from each of a number of suppliers will be achievable without significantly departing from the composition of the individual Options recommended for that assembly.

Advice on equipment assemblies, the component items of which generally conform to the Options listed for a radiological purpose or for a radiodiagnostic room (Chapters 24, 25 and 26) is available from the Department (see Preface for the address to which requests for information should be sent).

Obviously consultation with potential users of any proposed equipment assembly will be essential if it is to fulfil its purpose.

6 HT generators (Gen)

6.1 Introduction

In compiling the Options below, the following major characteristics have been considered: tube voltage waveform, power rating, maximum tube current and tube voltage, minimum exposure time and maximum exposure repetition rate. For convenience the following abbreviations have been used: kV for tube voltage, mA for tube current, kW for power rating, mAs for the product of tube current and exposure time. The availability of facilities such as falling load, anatomical programming and high speed tubes and the question of sharing HT generators are also considered. The Options are generally in order of increasing power, radiological application and price. For example, the last two options Gen D and Gen E are particularly suitable for rapid film-changer work and cine work respectively because of their relatively high power, short minimum exposure time and appropriate maximum exposure repetition rate.

Some equipment such as dental and dedicated mammographic units have an in-built HT generator, the characteristics of which are dealt with in the chapters relating to this equipment. Mobile and portable X-ray equipment and mobile image intensifiers are considered in Chapters 17 and 18 respectively.

6.2 Option Gen A – Medium power, single phase

6.2.1 General Comments

This Option is the most basic and cheapest, being single phase (2 pulse), with a minimum exposure time inherently limited to 0.01 second and a low maximum exposure repetition rate. Because of the tube voltage waveform, the beam quality and radiation output at a given kV and mAs will be lower than for 3 – phase and constant potential generators.

These limitations restrict the application of such generators to basic, non-sophisticated work demanding relatively low power and low repetition rates: for such circumstances they can, nevertheless, be very suitable. They will be chosen only for the very small radiodiagnostic departments undertaking for example skeletal work of a less demanding nature. They will rarely have a place in

larger radiodiagnostic departments since if the character or nature of work changes, the generator may impose prohibitive limits on flexibility.

6.2.2 Composition of Option

Single phase, 2 pulse generator
- 25 to 50kW (typically about 30kW)
- 300 to 500mA (typically around 500mA)
- 0.01 to 0.04 second minimum exposure time (typically 0.01 second)
- typically 125kV maximum

6.3 Option Gen B – High power, single phase

6.3.1 General comments

This Option is based on single phase, 2 pulse generators that provide a relatively high power rating in comparison with Gen A. The comments on Gen A still generally apply but, because of high power and exposure repetition rate, these generators may suit a more demanding role. However there would usually be little price advantage in comparison with a three phase generator of type Gen C and the latter will probably be preferred.

6.3.2 Composition of Option

Single phase, 2 pulse generator
- in excess of 50kW (eg 60 to 80kW)
- in excess of 500mA (eg 600 to 1000mA)
- typically 0.01 second
- typically 125kV maximum

6.4 Option Gen C – General purpose, medium power, 3-phase

6.4.1 General Comments

This Option is based on 3-phase, usually 6 pulse, generators of medium power. They will be suitable for all general radiography and fluoroscopy. They will often be suitable for peripheral and abdominal angiography applications in conjunction with angiographic Options Ang A and Ang B (accessories for fluoroscopy tables – see paragraphs 12.2.2 and 12.2.3). However the minimum exposure time, power and maximum exposure repetition rate characteristics of many generators within this Option will make them unsuitable for more demanding angiographic applications (see Gen D paragraph 6.5).

6.4.2 Composition of Option

3-phase, 6 pulse generator (occasionally 12 pulse)
- 50 to 70kW (typically about 60kW)
- 500 to 800 mA (typically around 700mA)
- 0.01 second minimum exposure time (occasionally 0.003 second)
- 125 or 150kV maximum
- maximum exposure repetition rate in the range 6 to 8 per second but often lower, eg 2 per second

6.5 Option Gen D – High power, 3-phase, medium repetition rate

6.5.1 General comments

This Option is based on more powerful 3-phase generators (usually 12 pulse) with a power, maximum exposure repetition rate and minimum exposure time very suitable for rapid film-changer work in general angiography work utilising angiographic equipment Options Ang D and Ang E (paragraphs 12.3.2 and 12.3.3). They may also be required where the demand for Accident and Emergency work is high.

6.5.2 Composition of Option

3-phase, 12 pulse generator (occasionally 6 pulse)
- 70 to 100kW (occasionally as high as 125kW)
- 700 to 1000mA (occasionally as high as 1250mA)
- 0.003 second minimum exposure time
- 150kV maximum
- maximum exposure repetition rate not less than 8 per second (but insufficient for cine applications)

6.6 Option Gen E – Highest power, 3-phase, highest repetition rate

6.6.1 General comments

This Option covers a range of the most sophisticated and powerful generators. They provide facilities justified for specialised radiological techniques when these are to be taken in substantial numbers. They are particularly suitable for pulsed-cine work because of the high maximum exposure repetition rate.

6.6.2 Composition of Option

3-phase, 12 pulse or constant potential generator
- 130 to 200kW
- in excess of 1200mA

- minimum exposure time in range 0.001 to 0.0001 second
- 150kV maximum
- maximum exposure repetition rate not less than 80 per sec.

6.7 Falling load facility

Theoretically, when used with automatic exposure control, a falling-load generator will automatically provide the shortest possible exposure time for any selected kV. This would be achieved by commencing every exposure at close to the generator/tube maximum rated mA at the kV selected and reducing the mA automatically during the exposure so that the tube is always just within its maximum rated power capability throughout the exposure (the latter being terminated by the automatic exposure control).

In practice many falling-load generators reduce the mA in steps during an exposure and the duration of the first step is particularly important (denoted as 't' seconds). With such systems the mA will be constant during the first step and thus no falling load advantage can be realised for exposures less than 't' seconds. Indeed because the mA for the initial step must be such as to ensure that the tube will not be overloaded if an exposure does last 't' seconds, the mA is pre-set at a value lower than would be available for exposures less than 't' seconds on an identically rated generator without falling load. This means that for exposures below 't' seconds, a shorter exposure could have been achieved with a non falling-load generator. Effectively, therefore, for exposures less than 't' seconds, a falling-load facility will downrate a generator by perhaps 30 per cent. Furthermore, all falling-load exposures commence with a very high mA even where a short exposure time is unnecessary. This means that the X-ray tube is unnecessarily loaded for examinations which would otherwise be undertaken with a smaller mA and a relatively longer exposure time.

In summary, falling-load offers no advantages for single exposures less than 't' seconds and indeed may be disadvantageous. In view of the fact that 't' may be 0.1 second or more, this is a serious consideration. Even for exposures greater than 't' seconds, advantages may be dubious when it is realised that the second step reduction in mA may not occur until perhaps 0.4 seconds from commencement of exposure.

With some falling-load generators the mA decreases virtually continuously during an exposure following an exponential law. However even with these generators the exponential decrease may not commence until a lapse of time approaching 0.1 second and the tube loading analogue used for the circuitry may be significantly below the maximum loading which might be achieved with free selection.

Some generators allow normal 'two or three knob' selection of radiographic factors in addition to falling-load. However the degree of freedom allowed to the operator may be substantially less than with an equivalent non-falling load type.

Obviously a falling-load generator must be used with automatic exposure control with the latter requiring care in positioning the appropriate radiation detector (see paragraph 6.9)

Falling-load generators will be more expensive than an equivalent non-falling-load type from the same supplier.

6.8 Anatomically Programmed Radiography (APR)

Generators facilitating APR provide a number of push-buttons, each associated with a particular radiographic projection. Operation of a push-button for a particular projection automatically sets the kV and mA (or mAs in the absence of automatic exposure control) and tube focus which are appropriate to that view, these having been pre-set at installation according to customer preference. A 'plus' or 'minus' facility will be provided for limited adjustment of kV and mA about the pre-set values to allow for patient build.

The claimed advantage is that radiographs of consistent quality can be obtained without reference to exposure technique tables, thus easing the work of radiographers. This can be particularly valuable where for example at week-ends and nights equipment may need to be used by an operator unfamiliar with it. However operator judgement is still required in correct operation of the 'plus' and 'minus' facility. Free selection ('two or three knob') will also be possible. Generally APR has not been widely adopted in the UK with its high standard of radiographer training. Even where provided it is often under-utilized. This may be due to the fact that the range of selectable views is often insufficient to cope with the wide variety of examinations undertaken in a general radiographic room yet too extensive to be justified in a room dedicated only to a few types of examination.

APR is expensive and may add 50% to the cost of an equivalent generator without APR.

6.9 Automatic Exposure Control (AEC)

By placing in front of a film a detector which integrates the amount of radiation falling on the film, an exposure can be terminated when sufficient radiation has reached the film to produce an adequate film-density. Such a device has the potential consistently to provide correctly exposed radiographs in the minimum exposure time for the kV and mA selected (or for the view selected with APR or for the kV selected with falling-load). This would lead to fewer repeats and thus lower patient dose.

To achieve this advantage an operator skilled in the use of AEC is necessary. Unless the kV and mA selected are appropriate and unless the appropriate radiation detector is carefully and correctly positioned with respect to the patient a poor radiograph will result. There is some evidence to suggest that AEC does not lead to a fall in the number of rejected films to the extent which might be expected. Despite this, use of AEC is to be encouraged provided it is accompanied with adequate instruction in its proper use. It is particularly valuable for spot-films, APR and in situations where an equipment is dedicated to a few types of examination only. It is essential for falling-load generators. Care should be taken in installing APR with rare-earth (very fast) film-screen combinations since the AEC may not be capable of operating at the very short switching times which such screens necessitate in some examinations.

A control facility for the generator may be required (see paragraph 6.11).

6.10 Shared generators

Generators are available designed to allow interfacing with several control consoles each equipped with all the selectors, displays and exposure controls necessary for setting radiographic factors and making an exposure. Furthermore the consoles may be geographically separated and each may control a complete radiographic equipment assembly incorporating one or several tubes. The number of radiographic equipment assemblies which can be controlled with such a generator depends on both the number of tube outlets provided on the generator and the number of consoles which can be connected to it. These so called 'shared' generators are to be distinguished from the normal generator which, although it may be connected to several tubes often mounted on separate equipments, nevertheless will have one main control console (excluding the limited controls on mobile control consoles which some generators offer). This more normal arrangement dictates that all equipment controlled from the one main control console must be in view of that console: a disadvantage which a shared generator overcomes.

The generator may be shared between radiographic assemblies in different rooms separated by fairly large distances and even on different floors provided the maximum run for the HT cables is not exceeded. It could equally well be used for sharing in a single room sub-divided with a view to each sub-area functioning as an independent activity unit where space is at a premium. In general sharing between more than two rooms is not recommended. Also it is important that each control console has the full range of controls and facilities necessary for the equipment with which it is associated including two or three 'knob' selections of kV/mA/mAs.

With a shared generator the total cost of equipment for two rooms (or sub-areas) will usually be more than but occasionally be less than an equivalent arrangement utilising conventional generators. However any cost advantage will depend on the shared generator chosen and the costs of the conventional generators which would otherwise have been used. A shared generator will be more expensive than its conventional equivalent.

A high power shared generator obviously makes that high power available to each shared equipment: this may be attractive where it would not be viable financially to supply each of those equipments with a conventional generator of that power.

A disadvantage of a shared generator is that a breakdown or maintenance of a central unit will stop activity on all the shared equipments. Additionally none of the shared equipments should undertake fluoroscopy or rapid radiographic examinations since during all of the time such a procedure is being conducted with one equipment, the generator will not be available for radiographic examinations on another. Although two radio-

graphic exposures cannot be made simultaneously, the time to clear the system for exposure on one console after an exposure on another is so short with radiography that in practice this will not be a limiting feature.

6.11 Control facilities

If a generator is to be used for applications involving high-speed tubes, automatic exposure control, automatic brightness stabilization, pulsed cine or 'simultaneous' bi-plane, an appropriate control facility will be required. Such control facilities may be built into some generators and/or included within the price. However, for other generators it may be necessary to order an interface unit as a separate item at extra cost. This may also apply to control facilities for satellite control consoles and anatomically programmed radiography.

6.12 'Simultaneous' bi-plane applications

By a 'simultaneous' bi-plane examination is meant an examination in two planes (usually at right angles to one another) whereby the two X-ray tubes are automatically fired alternatively in rapid sequence at two rapid film – changers or two cine/100mm cameras. The time lapse between alternate exposures in the two planes will be at maximum one half cycle of the mains supply, ie 0.01 second but may be significantly less.

'Simultaneous' bi-plane techniques will require either two generators with characteristics not inferior to Gen D and linked by a bi-plane control facility (see para 6.11) or a single generator designed specifically for simultaneous work. The latter generally have the characteristics of Gen E. In either case a control facility (see para 6.11) and a programming unit will be required for the rapid film-changer and/or cameras.

7 Radiographic tables (RT)

7.1 Introduction

A radiographic table will be required in every general radiographic room. Every table will be associated with an X-ray tube either ceiling or floor-mounted.

7.2 Option RT A – Fixed-top 'Bucky' table

7.2.1 General comments

This Option is the most basic and consists of a rigid table framework with fixed table-top complete with 'Bucky' assembly and rails for accessories.

7.2.2 Composition of Option

Basic table complete with 'Bucky' assembly, accessory rail, patient immobiliser and lateral cassette holder.

Optional extras:
i. Table-top extension (30cm)
ii. Mattress

7.3 Option RT B – Floating-top Bucky table

7.3.1 General comments

These types of table are similar in both design and function to those described in Option RT A with the exception that the table-top is movable (floating) on the basic framework, allowing patient positioning without physical disturbance. This feature may have particular importance during examination of accident cases and critically ill or elderly patients. In general a floating table-top facilitates ease and speed of working and more accurate patient positioning. Its disadvantage relates to an increased table-top to film distance. The latter will result in increased magnification and geometrical unsharpness for which some compensation is possible only by use of a greater FFD and correspondingly greater generator output.

7.3.2 Composition of Option

Except for the floating top, the composition of this Option is the same as RT A.

7.4 Option RT C – Tilting 'Bucky' table

7.4.1 General comments

In addition to the facilities offered by RT A or RT B, a table in this category would have the facility to tilt from vertical to about a 15° adverse (Trendelenberg) position, enabling radiographic views of the patient to be obtained in the erect, prone or intermediate positions without being physically disturbed. This will be of value to a limited percentage of cases and therefore will be chosen only where a substantial number of such cases are to be examined.

7.4.2 Composition of Option

Basic table with a motorised tilt 0° to 90° and up to 15° adverse with perhaps moving top and complete with accessories as for RT A plus shoulder rests, handgrips and foot-rest.

7.5 Cassette-less automated radiographic tables

Radiographic tables are available that incorporate below the table-top a number of cut-film storage magazines (usually 5 or 6, each for a different film size) and which have attached to the end of the table an automatic film processor. A film of a preselected size is transported from a storage magazine to the 'expose' position where it is clamped between intensifying screens. After exposure the film is automatically transported direct to the attached film processor. Some tables may incorporate a take-up magazine for exposed film to allow the table to continue in use in the event of processor malfunction. Some tables use roll-film, in which case the roll is automatically cut to the preselected size.

Automated tables are expensive and will be justifiable only in a room handling a very high workload throught the day or frequent high peaks of workload where it can be demonstrated that increase in efficiency is commensurate with the cost. It should be noted that in a room equipped with an automated table/processor combination, cassettes may still have to be used eg for lateral views using an horizontal beam or for radiographs taken using a chest stand in the same room. Unless the attached processor can accept 'daylight' cassettes used for such views the room will not be able to function in a fully self-contained fashion thus reducing the advantages of the automated table.

Cassette-less tables with a take-up magazine can obviously be used without an attached processor and some such tables may not allow a processor to be attached. Such an arrangement will generally be far less attractive and less efficient.

7.6 Variable-height radiographic tables

The height of the table-top from the floor can be varied with some models of radiographic tables and, in particular, some can be brought to a very low level. The lower the level to which the table-top can be driven the easier it will be for the elderly and disabled to mount and dismount. A variable height also makes it easier to transfer patients from trolleys etc. The above advantages should be borne in mind when selecting equipment in circumstances where the work-load includes a significant number of patients who would benefit from such a feature.

8 Tomographic equipment (Tom)

8.1 Introduction

The Options that follow are arranged in order of increasing sophistication, price and degree of dedication to tomographic work. The suitability of tomographic apparatus for general radiography must be considered: the more sophisticated units are less generally adaptable in this respect. It should also be noted that the precision attainable with any equipment will be dependent on its rigidity and quality of engineering. Options Tom A or Tom B will be the normal requirement. Others have as their prime distinguishing feature the facility for one or more of the following move-

ments; circular, elliptical, hypocycloidal, spiral: these complex movements, particularly the last two, will be required only where there is a substantial work-load of specialised examinations eg petrous bone.

8.2 Option Tom A – Attachments for linear tomography

8.2.1 General comments

This Option comprises the means for attaching an X-ray tube mounted on either a floor/ceiling support or a ceiling suspended support to a Radiographic Table RT A or RT B and conventional fluoroscopic tables. The quality of tomography will be heavily dependent on the rigidity of this attachment and the means of connection. Because the tube can be freed from its attachment to the radial arm it can be used for other radiography in the room eg laterals without turning the patient, radiographs using a chest stand for patients on beds or trolleys and for views requiring the tube to be lowered as close to the floor as practicable. These are substantial advantages compared with other tomographic Options for rooms used primarily for general radiography. It will be chosen for rooms where the tomographic work-load is low in relation to the other radiographic work undertaken with the table. Usually only linear tomography will be facilitated although more expensive models may allow circular and elliptical tomography.

8.2.2 Composition of Option

- means to allow detachment of X-ray tube
- angle variable up to 60°
- motor drive
- variable speed of movement
- height of cut variable from 1 to 25cm above table-top

Optional extra:
- multi-section cassette with screens and having a capacity of between 3 and 7 films

8.3 Option Tom B – Integrated-tube radiographic tomographic table

8.3.1 General comments

This Option basically combines the features of a comprehensive Radiographic Table (eg RT B) with an integrated tube stand designed for tomography. Often only 'linear' tomography is provided but circular and elliptical tomography may be facilitated. The generally more rigid construction provides for accuracy, ease of adjustment and setting up, for both tomography and zonography examinations. The additional cost would be justified for such a unit in an examination room dealing with both general radiography and tomography with a high workload of both. It is designed to allow general 'Bucky' radiography and will usually allow 'off-table' radiography with an horizontal beam. The latter will be very important for full general radiographic use.

The Option will also be suitable for all non-specialised tomographic examinations and would be the choice for the bulk of tomographic work in the medium-sized radiodiagnostic department (about 5 rooms) supplemented as appropriate by the facilities of Option Tom A.

8.3.2 Composition of Opiton

- Radiographic Table with integral tube stand designed for tomographic movements
- angle variable up to 60° with facility for Zonography (8° or less)
- variable speed of movement
- tube angulation to allow 'off-table' radiography usually included
- height of cut variable from 1 to 25cm often motorised
- usually an operating console dedicated to tomography
- 'Bucky' radiographic facilities generally as described in Option RT A
- exceptionally a tilting facility may be a design feature

Optional extra:
- multi-section cassette with screens and having a capacity of between 3 and 7 films.

8.4 Option Tom C – Dedicated tomographic table linear/circular/elliptical

8.4.1 General comments

This Option differs from Tom B basically on providing the facility for circular and/or elliptical movements in addition to 'linear' and being generally dedicated to tomographic work. Units within this Option tend to incorporate other more sophisticated facilities than Tom B and whilst allowing 'Bucky' radiography, tend to be less convenient for general radiographic work.

8.4.2 Composition of Option

- linear, circular and/or elliptical movements
- angle variable up to 60° with facility for zonography (8° or less)

Tomographic equipment (Tom)

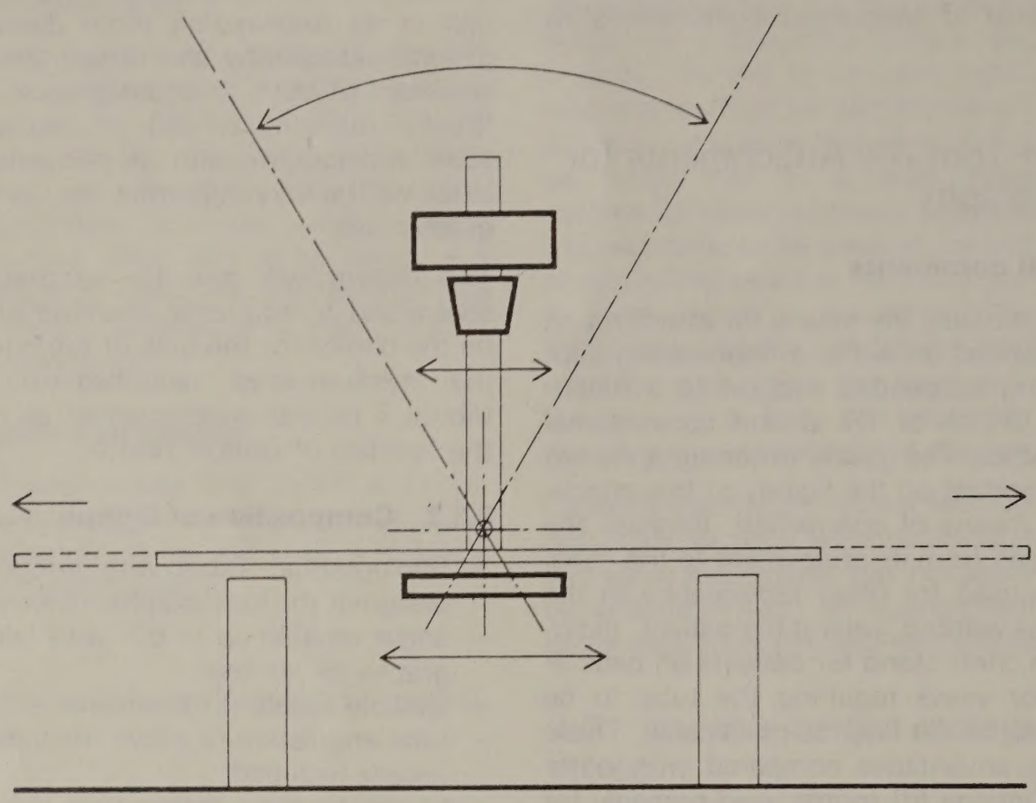

Option Tom B – Integrated-tube radiographic/tomographic table (paragraph 8.3)

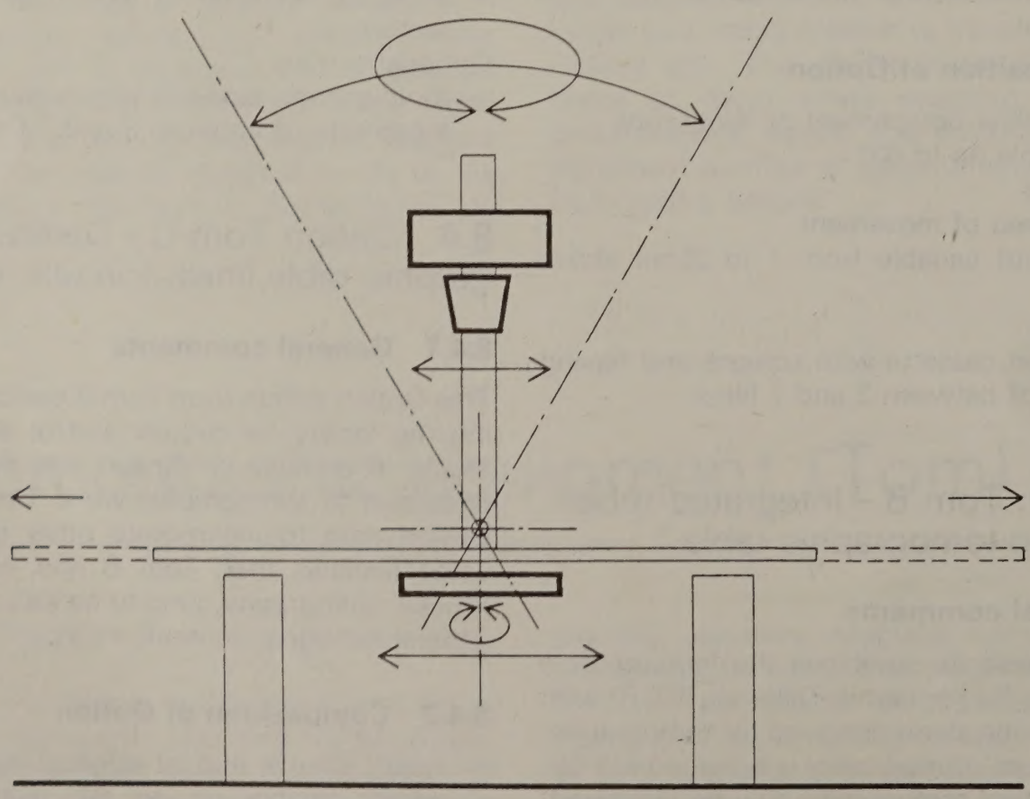

Option Tom C – Dedicated tomographic table, linear/circular/elliptical (paragraph 8.4)

- variable speed of movement
- variable FFD
- tube angulation to allow 'off-table' radiography may be included
- height of cut variable from 1 to 25cm motorised
- operating console dedicated to tomography
- usually simple cassette serial device with facility also to use multi-section cassettes
- often cassette format sensing
- often tomography film density control
- often anatomically programmed radiography

8.5 Option Tom D – Dedicated tomographic table allowing hypocycloidal and/or spiral tomography

8.5.1 General comments

Equipments within this Option are of the most sophisticated design and dedicated to tomography. They will be highly automated allowing for a range of tomographic movements ie linear, circular and/or elliptical, and hypocycloidal and/or spiral.

They are specialised and being sophisticated will rarely be chosen except in the largest departments and/or where a clinical specialty generates a significant workload of examinations for which precision and complex tomographic movement such as spiral and hypocycloidal are essential.

8.5.2 Composition of Option

As for Option Tom C with the addition of the following:

- hypocycloidal and/or spiral movements
- automatic serial changer
- TV fluoroscopy may be a design feature
- often facility to tilt and/or rotate the patient

8.6 Fluoroscopy tables with tomographic facilities as an integral feature

The above are not listed as a separate tomographic Option since the tomographic facility is an inherent feature of a table primarily dedicated for general fluoroscopic procedures or special procedures with an integral over-table tube.

9 Chest/erect radiographic equipment (Ch)

9.1 Introduction

Although Chest/Erect Radiography may represent a significant part of the total workload of a District General Hospital radiodiagnostic department and require special facilities, in most instances the total volume of the work can be handled using either the simple Chest Cassettee Stand or multi-purpose equipment like Bucky Stands (Vertical or Universal) and Tube linked Units.

In departments having a total chest radiographic workload of about 17,000 patients or more per year, a case can often be made for the more complex purpose-designed apparatus for chest radiography. In a department having a very high chest-film workload, a purpose-designed chest unit with its own 'dedicated' film processor might be justified.

9.2 Option Ch A – Cassette stand

9.2.1 General comments

This Option comprises the most basic chest cassette stands. They are ancillary units which will be installed in many radiographic rooms in association with an existing tube support or integral over-table tube and should be located against the wall in line with the radiographic table.

9.2.2 Composition of the Option

- floor or wall-mounted cassette stand
- facility to hold a range of cassettes up to 35 × 43cm
- usually a facility to tilt the cassettee 15° from vertical
- facility to hold a stationary grid

9.3 Option Ch B – Vertical 'Bucky' stand

9.3.1 General comments

Equipments within this Option are usable for a range of radiographic techniques which require 'Bucky' radiogaphy of the patient in the erect position and skull radiography. They can also be used for chest radiography (without 'Bucky') with the aid of a special cassette attachment (35cm × 43cm). They offer all the advantages of a simple Chest Cassette Stand Ch A as regards counterweighting, limited space requirement and mode of use, and can be floor or wall mounted.

9.3.2 Composition of Option

- floor or wall-mounted stand
- 'Bucky' assembly
- grid
- cassette holder for attachment to the face of the stand
- patient immobiliser with 20cm and 30cm compression bands

9.4 Option Ch C – Universal 'Bucky' stand

9.4.1 General comments

Equipments within this Option are more versatile than Ch B in that the whole 'Bucky' assembly may be angulated or rotated (in addition to the movement available with Ch B) to suit the patient posture.

9.4.2 Composition of Option

As for Ch B except that the whole 'Bucky' assembly may be angulated or rotated.

9.5 Option Ch D – Tube-linked equipment

9.5.1 General comments

Equipments within this Option offer similar facilities to Ch C but are arranged to operate with their own tube-linked support centrally pivoted on a floor-mounted column with vertical movement of the pivot point. Not only can they be operated with an horizontal beam for erect chest radiography but the assembly can be rotated for use in any other vertical plane permitting considerable versatility.

9.5.2 Composition of Option

- floor mounted column carrying pivoted tube-linked assembly
- 'Bucky' assembly or cassette tray with fixed grid
- compression band
- cassette holder

Optional extra:
- patient trolley

9.6 Option Ch E – 70/100mm Odelca-type camera

9.6.1 General comments

Equipments within this Option are purpose designed chest radiographic units originally designed for mass survey work. The equipment comprises a large intensifying screen on which the image is reduced in size by a highly efficient optical system so as to produce a 70mm or 100mm film.

The economic argument for using 70 or 100mm film as opposed to large size 35 × 43cm film costing ten times the price has to be weighed against the fact that patient dose may be as much as ten times higher.

The hitherto popularity of Odelca-type systems appears to have dwindled with the availability of automatic cassetteless chest units (See Option Ch F).

9.6.2 Composition of Option

- basic Camera on twin column stand in a fixed relationship to the X-ray tube
- operational interlock system (Safety Monitor)
- special cassette
- exposed and unexposed film magazines
- automatic exposure control device

Optional extras:
- light beam diaphragm

9.7 Option Ch F – Automated Cassetteless Chest Unit

9.7.1 General comments

Equipment in this category is purpose designed for chest radiography using large size films (35 × 43cm) and conventional FFDs. Such equipment is most efficient when used in conjunction with a dedicated attached automatic processor to exploit a very high workload capacity.

Chest/erect radiographic equipment (Ch)

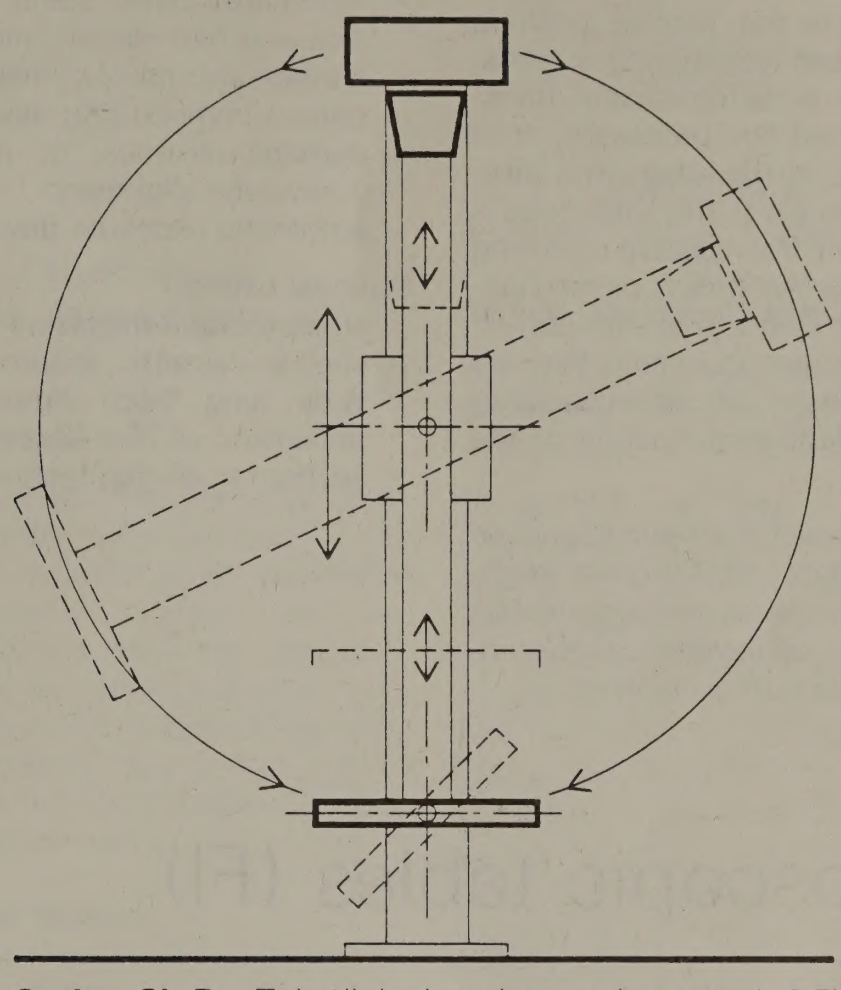

Option Ch D – Tube-linked equipment (paragraph 9.5)

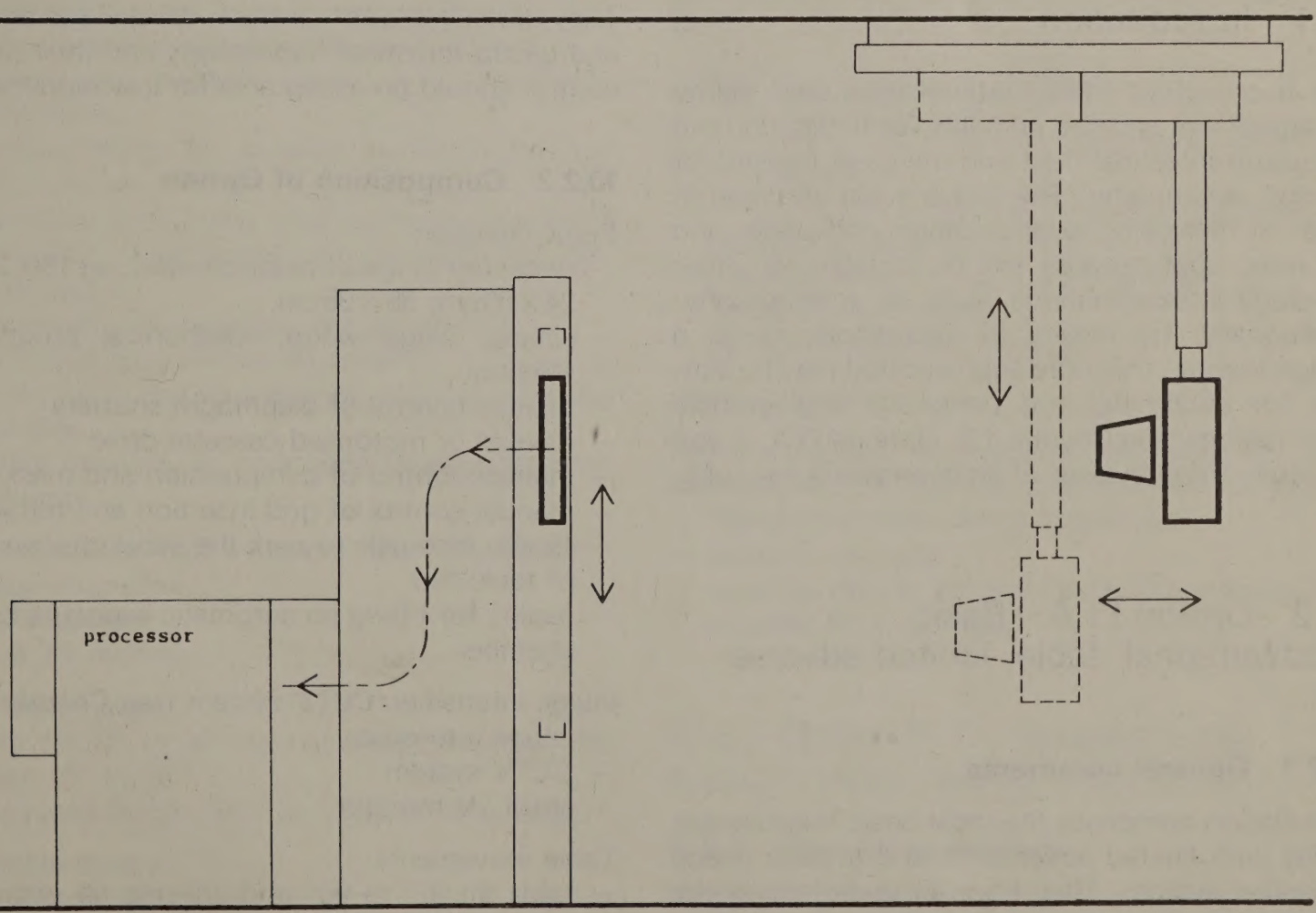

Option Ch F – Automated cassetteless chest unit with attached processor (paragraph 9.7)

The equipment incorporates, in a chest stand, a cut-film storage magazine from which a film is automatically transported to the 'expose' position where it is clamped between intensifying screens. After exposure, the film is automatically transported direct to the attached film processor, or in the absence or breakdown of the latter, to a take-up magazine. Unlike Option Ch E, the X-ray tube is attached to an independent floor/ceiling or ceiling tube support which may be electrically or mechanically coupled to the chest stand to ensure correct alignment. It will be important to ensure that the equipment allows radiography of patients sitting on a trolley or bed if a significant fraction of the workload is in-patients.

This Option will be considered in a radiodiagnostic department undertaking about 17,000 chest examinations per year or more where the ergonomics and economy of operation achievable could compensate for the high capital outlay involved.

9.7.2 Composition of Option

- automated chest stand with operational interlock and film identification system
- storage and take-up magazines
- patient immobilising device and handgrips
- perhaps electrical or mechanical system for X-ray tube alignment
- automatic exposure device

Optional extras:
- spare storage magazine
- special cassette adaptor (for patients with a wide lung field allowing use of maximum dimension of 35 × 43cm film)
- spacer for air-gap techniques

10 Fluoroscopic tables (Fl)

10.1 Introduction

The fluoroscopic table Options discussed below are equipment suitable primarily for fluoroscopy of the gastro-intestinal tract and the great majority of 'Bucky' radiography. The Options are arranged in order of increasing sophistication and price, and the more sophisticated will be suitable for other radiological examinations such as myelography. Additionally, by means of accessories or as a design feature, the more sophisticated may be suitable for abdominal and peripheral angiographic examinations (see Chapter 12). Options Fl A, B and C require the provision of an overtable X-ray tube.

10.2 Option Fl A – Basic 'Conventional' table, limited adverse tilt

10.2.1 General comments

This Option comprises the most basic fluoroscopic tables with limited adverse tilt and a basic image intensifier system. They have an undertable X-ray tube ('conventional' arrangement) and most of the devices will be controlled manually.

They are suitable for all basic 'Bucky' radiography and gastro-intestinal fluoroscopy and their manual control should be acceptable for low workload.

10.2.2 Composition of Option

Serial changer:
- restricted range of cassette sizes, eg 18 × 24cm, 24 × 30cm, 35 × 35cm.
- simple, single knob, mechanical programme selection.
- manual control of diaphragm shutters
- manual or motorised cassette drive
- manual control of compression and masking.
- manual control of grid insertion and retraction.
- facility manually to park the serial changer clear of table top.
- facility for fitting an automatic exposure control chamber.

Image intensifier/CCTV system (see Chapter 23):
- image intensifier
- CCTV system
- small TV monitor

Table movements
- table tilt: 0° to 90° and adverse tilt within the range of 10° to 30°.
- motorised longitudinal movement of table top.

Undertable Bucky:
- to accommodate cassettes up to 35×43cm either way round.
- vibrating/oscillating grid.

Accessories:
- hand grips

10.3 Option Fl B – Automated 'conventional' table, limited adverse tilt

10.3.1 General comments

This Option is distinguished from the more basic Fl A in providing generally more automatic facilities, a wider range of cassette sizes, motorised movements of the serial changer and its components and motorised table-top motions, with the facility to fit an automatic exposure control chamber. They have an under-table X-ray tube ('conventional' arrangement). This type of equipment will be chosen for the fluoroscopic rooms in most radiodiagnostic departments.

10.3.2 Composition of Option

Serial Changer:
- full range of cassette sizes,
- facility to pre-set from a range of film formats with automatic operation at exposure.
- sensing of cassette size with automatic collimation.
- perhaps facility for cassette loading from right and from left.
- motorised positioning of compression cone and motorised positioning of masking, eg for oesophagus.
- motorised grid insertion and retraction.
- motorised longitudinal movement.
- facility for fitting an automatic exposure control chamber.
- facility manually to park serial changer clear of table-top.

Image intensifier/CCTV system (see Chapter 23):
- image intensifier
- CCTV system
- small TV monitor

Table movements:
- table tilt: 0° to 90° and adverse tilt within the range 10° to 30°
- motorised longitudinal and lateral movements

Undertable Bucky:
- to accommodate cassettes up to 35×45cm either way round.
- vibrating/oscillating grid.

Accessories:
- hand grips
- shoulder supports
- band compressor

10.4 Option Fl C – Automated 'conventional' table, large adverse tilt

10.4.1 General comments

This Option is distinguished from Fl B in providing a maximum adverse tilt within the range 65° to 90° and perhaps the facility to attach a rotating cradle.

Equipment will have an under-table X-ray tube ('conventional' arrangement). The extra cost of the greater adverse tilt is justified only where a reasonable myelography work-load is to be handled, since this procedure can be satisfactorily performed with a table with a more limited adverse tilt. This Option will therefore be justified only in a large radiodiagnostic department or where there is a special demand for myelography. The latter will require lateral or oblique views and for this purpose it is assumed that a second (eg ceiling suspended) X-ray tube will be available in the same room.

Bi-plane fluoroscopy for myelography will rarely be warranted other than in regional neuroradiological/neurosurgical centres.

10.4.2 Composition of Option

As for Option Fl B with the following amendments and additions:
- table tilt: 0° to 90° with maximum adverse tilt within the range 65° to 90°
- perhaps facility to fit a rotating cradle
- lateral cassette holder
- patient support accessories

Optional extras:

Where bi-plane techniques are justified, the following will be required in addition to the above:
- lateral intensifier ceiling suspended
- lateral X-ray tube
- locating device for tube and image intensifier coupled to X-ray tube.

10.5 Option Fl D – Integral tube-support table, limited adverse tilt

10.5.1 General comments

This Option embraces equipment with an integral X-ray tube-support linking an over-table tube to an under-table image intensifier. It will be designed to

allow remote control. Such equipment is thus fundamentally different in construction than what is currently regarded as the more 'conventional' type of fluoroscopic table described in Options Fl A to Fl C. Its mode of operation is also fundamentally different.

Major advantages with respect to a 'conventional' table relate not only to the remote control facility but also to the provision of an over-table tube and are generally as follows:
- reduction in operator fatigue
- lower radiation dose to staff if operated remotely
- longer and variable FFD
- improved visibility of the whole of a patient (particularly children)
- generally more acceptable to children, the old and the very nervous
- facility to undertake fluoroscopy with an oblique (eg Craniocaudal) projection
- facility for tomography
- usually a facility allowing off-table radiography with an horizontal beam eg of chests
- for 'Bucky' radiography, a separate overhead tube and tube support may not be required but this is not always the case.

The major disadvantages are generally as follows:
- usually a higher cost than 'conventional' tables even after taking into account those circumstances where a separate ceiling suspended tube and tube support are not required for 'Bucky' radiography (a situation which does not always apply).
- operation remote from a patient is not favoured by many radiologists particularly if exposure controls are located solely on the main control panel ie where a mobile satellite control is not provided. Remote operation requires more co-operation from a patient in positioning during an examination particularly in the absence of a cradle. Also palpation and manipulation by hand is not possible (remotely operated mechanical devices are generally far less effective).
- changes in the area of a patient viewed (eg in following the progress of a barium swallow) are achieved on a conventional table by moving the serial changer/image intensifier assembly and can be achieved more rapidly than with the motorised movements provided with remote controlled equipment. This is particularly evident where, with some such equipment, only the table-top is motorised.
- orientation of the area of a patient viewed sometimes necessitates raising the patient from floor level with a consequent feeling of insecurity and, unless mechanically restrained, the possibility of a fall leading to injury.
- if, to overcome the problems of remoteness, a mobile satellite control unit is positioned close to a table, the advantages of reduced operator dose may be lost and indeed an increased radiation dose might arise.
- generally, due to the increased mechanical complexity of the under-table serial changer, cassette movement is slower leading to a greater delay in exposing a spot film.
- available evidence in the UK does not support claims of a higher patient throughput.

Remote-controlled tables with over-table tubes are very popular in some European countries but, because of the above disadvantages, they are far less popular in the UK. Thus careful consideration should be given to the relative advantages and disadvantages of such equipment before making a choice, in order to ensure that it will be fully utilised by the radiologists in the radiodiagnostic department in which it will be installed.

If myelography is to be undertaken, a lateral X-ray tube and a lateral cassette holder will be required.

10.5.2 Composition of Option
- table with integral tube-support linking an over-table tube with an under-table image intensifier
- facilities allowing remote control
- table tilt 0°to 90° and adverse tilt within the range 10° to 30°
- usually motorised longitudinal movement of the X-ray tube/image intensifier assembly in addition to motorised longitudinal movement of the table-top
- generally all the other facilities offered by Option Fl B.

Optional extras:

Where myelography is to be undertaken:
- lateral X-ray tube with support eg ceiling-suspended
- lateral cassette holder
- patient support accessories

10.6 Option Fl E – Integrated tube – support table, large adverse tilt

10.6.1 General comments

This Option differs from Fl D in that the maximum adverse tilt is within the range 65° to 90° (ie its major features are integral X-ray tube-support linking an over-table tube with an under-table intensifier and facility to allow remote control). The

advantages and disadvantages compared with the more 'conventional' tables Option Fl C are detailed under Option Fl D. It is suitable for myelography and the circumstances in which it will be chosen are given under Option Fl C. Lateral or oblique views will be required for myelography, for which a lateral X-ray tube and cassette holder will be necessary.

Bi-plane fluoroscopy for myelography will rarely be warranted other than in regional neuro-radiological/neurosurgical centres.

10.6.2 Composition of Option

As for Fl D with the exception of a greater maximum adverse tilt within the range 65° to 90° plus.
- lateral X-ray tube with support eg ceiling-suspended
- lateral cassette holder
- patient support facilities

Optional extras:

Where bi-plane techniques are justified, a lateral image intensifier coupled to the lateral X-ray tube will be required.

10.7 Option Fl F – Integrated tube-support table with multi directional movements

10.7.1 General comments

This Option comprises very sophisticated remote-controlled fluoroscopic tables incorporating an integral X-ray tube-support linking the tube with an image intensifier. It differs from Option Fl E in providing a greater range of movements for the tube/intensifier assembly and the patient support, allowing almost any viewing projection to be achieved with precision without the need for the patient to move within or on the support.

Equipment often incorporates as a design feature other more sophisticated facilities than Fl E and even where such facilities are not design features, they will still usually be required if the full potential of such an expensive table is to be fully realised.

It should be noted that the great majority of examinations performed on this type of table can be satisfactorily undertaken with other fluoroscopic table Options, albeit less conveniently and sometimes with less precise positioning. Thus this expensive Option will not be selected except in very large radiodiagnostic departments or where clinical specialities within a hospital produce a large demand for a wide range of sophisticated fluoroscopic examinations of a special nature.

The equipment will generally have the same advantages and disadvantages noted under Option Fl D. The patient however may well feel less secure and more apprehensive than when examined on any other fluoroscopic table.

10.7.2 Composition of Option

Facilities will be generally as given for Option Fl E plus the following:
- a wider range of movements for the tube/image intensifier assembly and the patient support generally equivalent to that which would be provided by a 90° – 0 – 90° table, a cradle rotating – 180° to + 180° and a table-top with longitudinal and lateral movements.
- automatic step wise longitudinal movement of the patient support (with appropriate kV changes) for abdominal and peripheral angiography may be a design feature.

For full utilization of such a sophisticated table, the following will normally be required (some may be design features):
- facility for pre-selection of an extensive range of film-format programmes
- automatic collimation according to cassette size and film format
- perhaps a limited range of anatomical programmes
- a range of patient cradles (possibly with trolleys) where this type of support is utilised
- a mobile remote control

Note: Automatic brightness stabilization or equivalent and an automatic exposure control chamber will be essential.

10.8 Magazine loading for serial changers

Some fluoroscopic tables provide, either as a design feature or as an optional extra, the facility for magazine loading of film for the serial changer. The magazine may utilise cut or roll film with, for example, a capacity of 60 films, 24 × 24 cm. There will usually be facility for pre-selection of extensive film-format programmes and automatic film identification/marking. There may be provision for automatic transfer of films to a dedicated processor.

The advantages of magazine loading is primarily associated with a reduction in cassette handling, in the number of cassetes required and in some increase in efficiency. The cost of such a facility is thus only justifiable where the work-load is exceptionally high and the increase in efficiency is

Fluoroscopic tables (Fl)

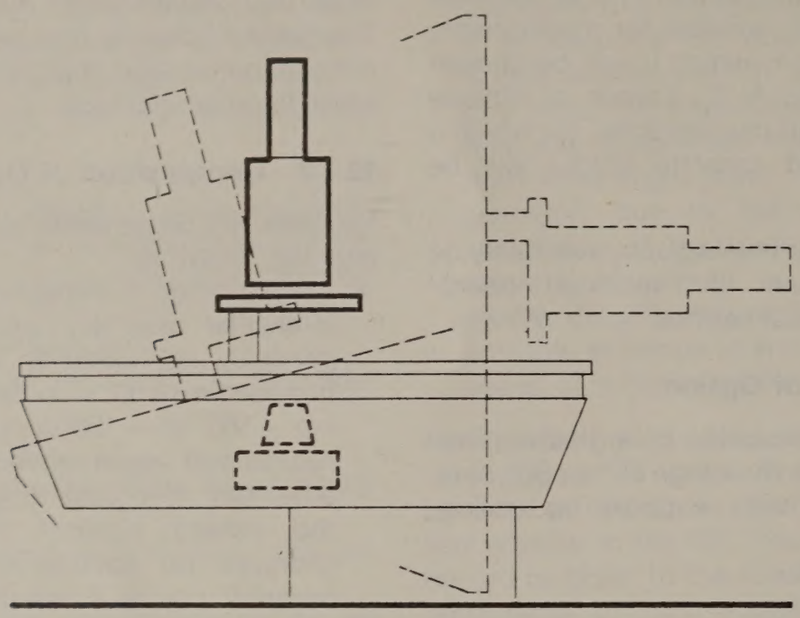

Options Fl A and Fl B – 'Conventional' tables: tilt 0° to 90° wth adverse tilt within the range 10° to 30° (paragraphs 10.2 and 10.3)

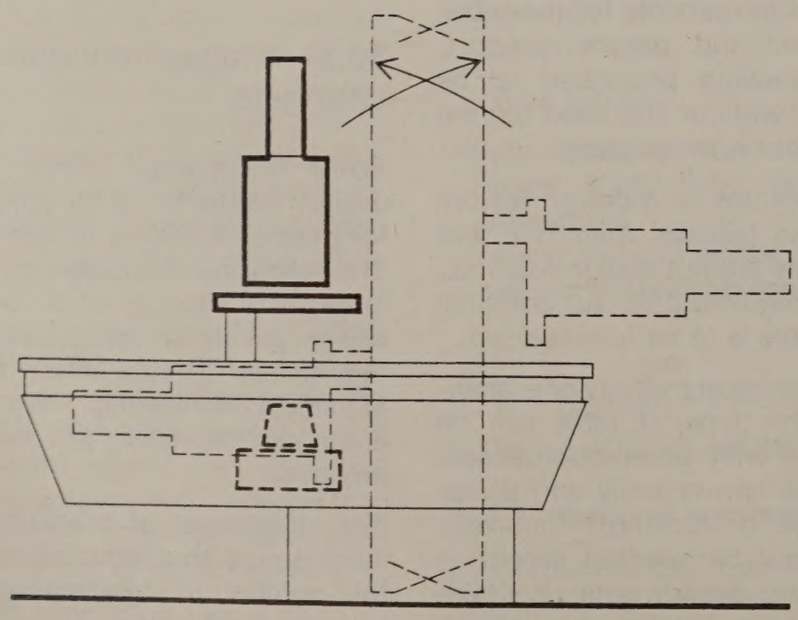

Option Fl C – 'Conventional' table: tilt 0° to 90° with adverse tilt within the range 65° to 90° (paragraph 10.4)

Fluoroscopic tables (FI)

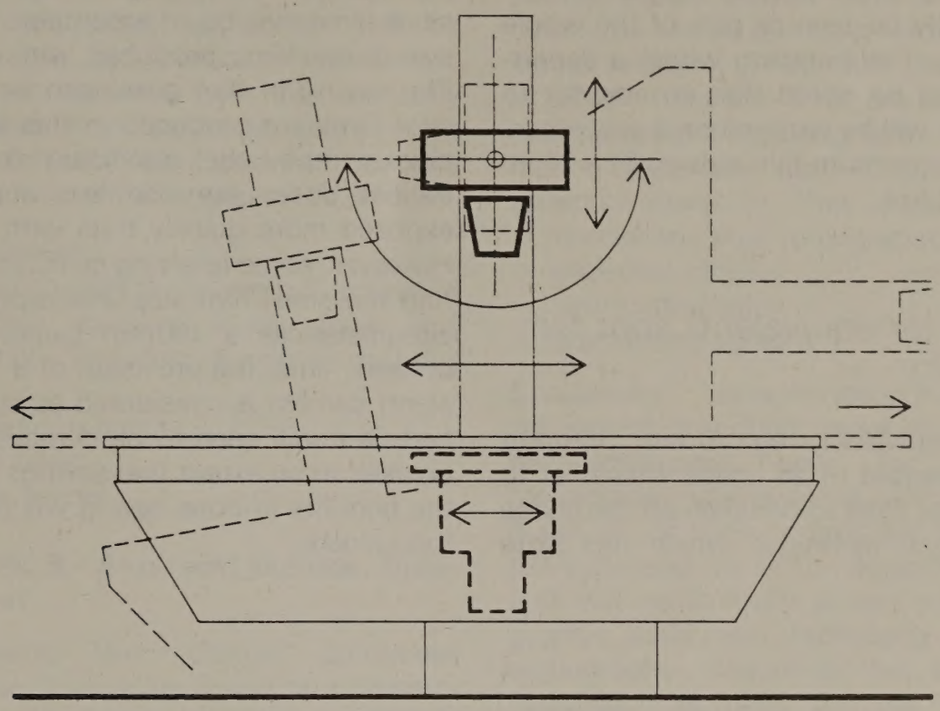

Option FI D – Integrated tube-support table: tilt 0° to 90° with adverse tilt within the range 10° to 30° as shown above (paragraph 10.5)

Option FI E – Integrated tube-support table: tilt 0° to 90° as above but with adverse tilt within the range 65° to 90° (paragraph 10.6)

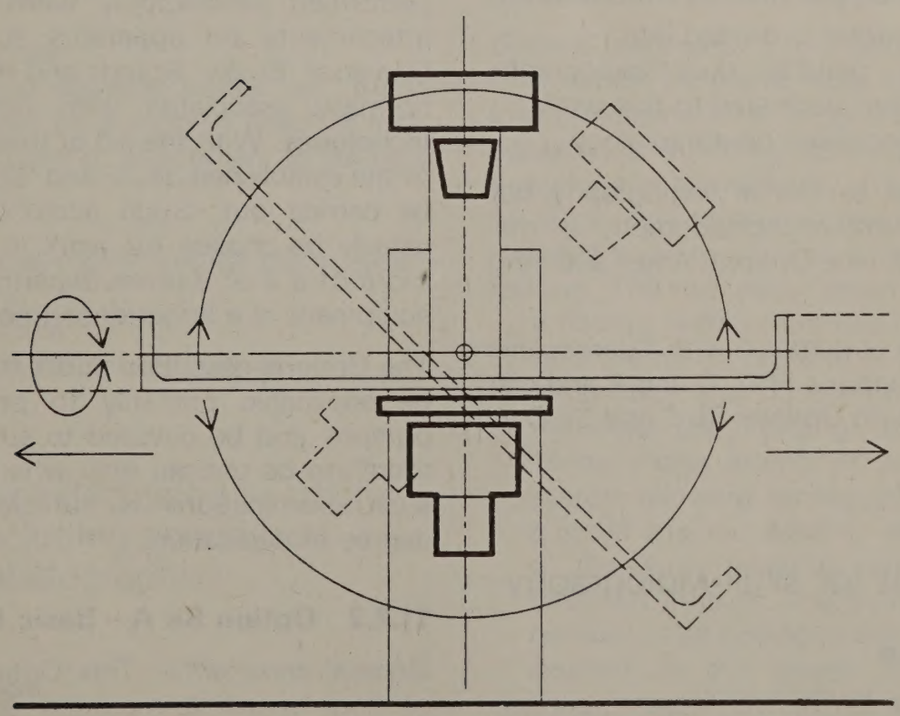

Option FI F – Integrated tube-support table with multidirectional movements (paragraph 10.7). Illustration shows only one arrangement for achieving range of movements.

commensurate with the cost: it is considered that this will rarely be so. The choice of magazine loading should generally be seen as part of the whole philosophy of large film handling within a department and it should be noted that an adaptor to receive a magazine will be required on a processor. Limitation on the maximum film size eg 24 × 24cm can be a disadvantage.

10.9 100mm (or equivalent) spot film photofluography

A 100mm (or equivalent, eg 70mm, 105mm) camera can be attached to an image intensifier to allow small size spot films to be taken off the image intensifier output. A technique which this Note refers to as 'photofluorography'. Image intensifiers now provide such good image quality that such small films may be an acceptable alternative to full-size X-ray films produced with a serial changer. The saving in film costs can be substantial if all spot-films are produced in this way and this may quickly repay the significant cost of a camera. Patient doses are also less and a film can be exposed more quickly than with a serial changer. However, some referring clinicians and radiologists find the small film size unacceptable and in these circumstances a 100mm camera may be under utilized. Thus the provision of a 100mm (or equivalent) camera is considered as an item to be justified, ie it will need to be demonstrated that it will be used to an extent that savings in the film bill and the benefits in dose saving will off-set the cost of the camera.

11 General skull radiographic and specialised neuroradiological (pneumo-encephalographic) equipment (Sk)

11.1 General introduction

Equipment in this chapter is divided into
- that suited for general skull radiography including equipment dedicated to this work
- that suited for specialised neuroradiology

Equipment dedicated to cranial angiography but not facilitating pneumo-encephalography is discussed in Chapter 12 (see Options Ang I and Ang J).

Myelography can be undertaken with fluoroscopic tables described in Options Fl C, D and E and can also be undertaken with Options Sk C and Sk D as described below.

11.2 Equipment for skull radiography

11.2.1 Introduction

Options described under this sub-heading are precision built units dedicated primarily to skull radiography. They do not facilitate specialised pneumo-encephalography.

A great deal of general skull radiography can be performed satisfactorily with the aid of simple attachments on apparatus such as Vertical or Universal 'Bucky' Stands and Radiographic Tables normally associated with general radiographic techniques. With the aid of these accessories most of the established 'skull' and 'sinus' techniques can be carried out. Such accessories will therefore usually be chosen for work in a general/casualty room of a 2 or 3-room department or as auxiliary equipment in a larger department.

The Options described under this sub-heading will be applicable primarily to precision skull radiography and be devoted to such work. They will therefore be chosen only where the work-load of such examinations is sufficient to justify this degree of dedication.

11.2.2 Option Sk A – Basic Skull unit

General comments This Option comprises floor or floor-to-ceiling mounted equipment purpose-designed for skull radiography with a rotatable C-arm on which the tube and 'Bucky' assembly will be mounted to allow orientation for all established

skull views including magnification techniques. Because of the need for accurate and reproducible mechanical settings, such equipment will be robustly constructed and precision engineered. Generally most movements will be manually operated and braked. It will be the equipment most commonly used for skull work and will normally share a generator with other apparatus in a room.

Composition of Option
- floor or floor-to-ceiling mounted rotatable C-arm assembly carrying X-ray tube and 'Bucky' assembly including a mirror centring facility
- head immobilisation band
- special mobile table
- lateral cassette holder

11.2.3 Option Sk B – Skull and skeletal, tube-linked equipment

General comments This Option comprises equipment with an X-ray tube linked to a cassette holder by a straight arm pivoted on a support, ceiling suspended or floor-mounted. This allows rotation of the tube/cassette holder in the vertical plane. Rotation around the point of attachment to the ceiling is usually facilitated. Such equipment has particular advantages in casualty work since skeletal and other radiographic work can be undertaken in addition to skull radiography. However more patient co-operation is generally required and precision skull radiography is more difficult to achieve. A generator may be shared with other equipment in a room.

Composition of Option
- X-ray tube-linked cassette holder (or 'Bucky' assembly) pivoted on a support which is rotatable around its point of attachment to ceiling or is floor-mounted
- variable FFD
- motorised vertical movement of tube/cassette holder assembly
- special mobile table
- facility for magnification techniques

11.3 Equipment dedicated to neuro-radiological (including specialised pneumo-encephalographic) examinations

11.3.1 Introduction

The two Options described under this sub-heading are distinguished from others in that they facilitate specialised pneumo-encephalography and are designed around this technique ie they allow the patient to be viewed from a greater variety of directions and in particular allow the patient to be 'somersaulted'. They will usually employ an isocentric principle. They are precision engineered incorporating a high degree of flexibility and automation to ensure ease of patient handling and speed of operation. They allow
- specialised skull radiography
- encephalography
- ventriculography
- cranial angiography

Specialised pneumo-encephalography using equipment described under this sub-heading will be considered only for regional neuro-radiological/neurosurgical centres. However most, if not all, of such centres will be provided with a computerised axial tomographic (CAT) scanner and will have ready access to dedicated tomographic equipment facilitating specialised cranial angiography. Assuming that such equipment is available, the need for the following Options designed specifically for specialised pneumo-encephalography, is very doubtful and a special case would need to be made for such a provision.

For cranial angiography a contrast media injector will be required, but is not included under the Options: injectors are considered in Chapter 12 paragraph 12.6.

11.3.2 Option Sk C – 'Somersaulting' with independent patient support

General comments This Option comprises equipment which facilitates most types of cranial radiological examinations, ie general precision skull radiography, pneumo-encephalography, cranial angiography and tomography. It is distinguished from Sk D by comprising two major distinct assemblies installed so as to interlink in an accurate geometric fashion. The two major assemblies are:
- a floor or ceiling-mounted rigid arm (which may be a C-arm) on one end of which is mounted an X-ray rube and on the other end of which is mounted the imaging system comprising a 15cm image intensifier and cassette/'Bucky' system allowing tomography. The arm will be pivoted and mounted to allow the central axis of the X-ray beam to pass from almost any direction through one point in space (the iso-centre). In all positions the X-ray beam remains centred to the image intensifier. Focus-to-image intensifier distance will be variable
- a floor-mounted patient chair attached to a pivot allowing the patient to be 'somersaulted' and to be rotated around a vertical axis.

General skull radiographic and specialised neuroradiological (pneumo-encephalographic) equipment (Sk)

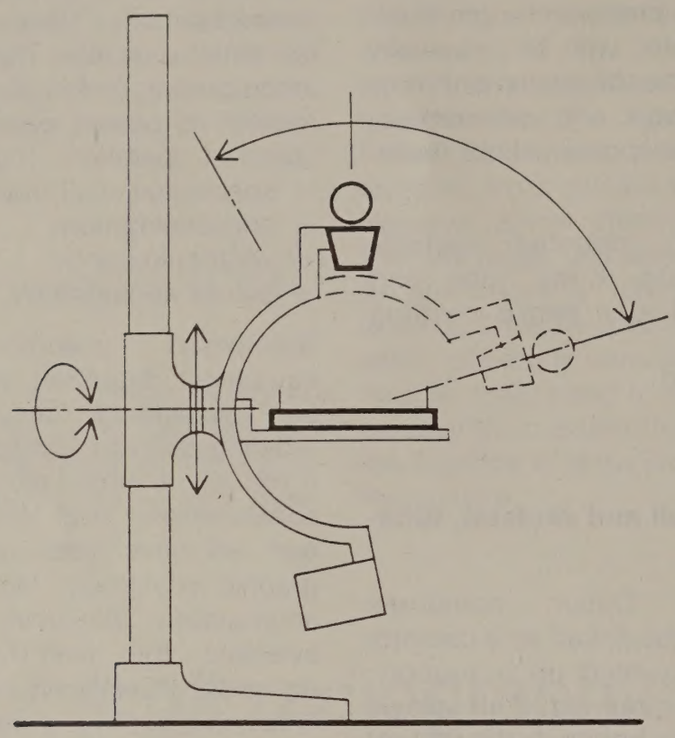

Option Sk A – Basic skull unit (paragraph 11.2.2)

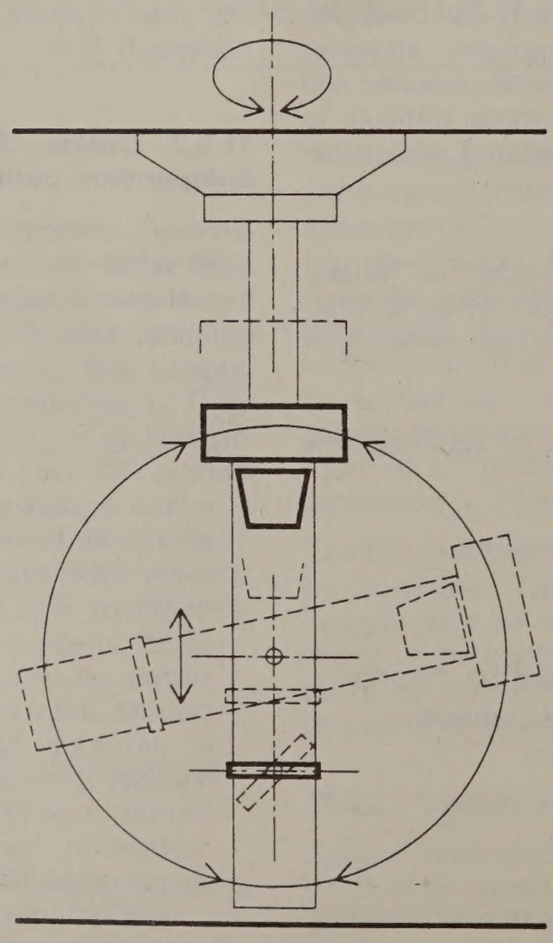

Option Sk B – Skull and skeletal, tube-linked equipment (paragraph 11.2.3)

General skull radiographic and specialised neuroradiological (pneumo-encephalographic) equipment (Sk)

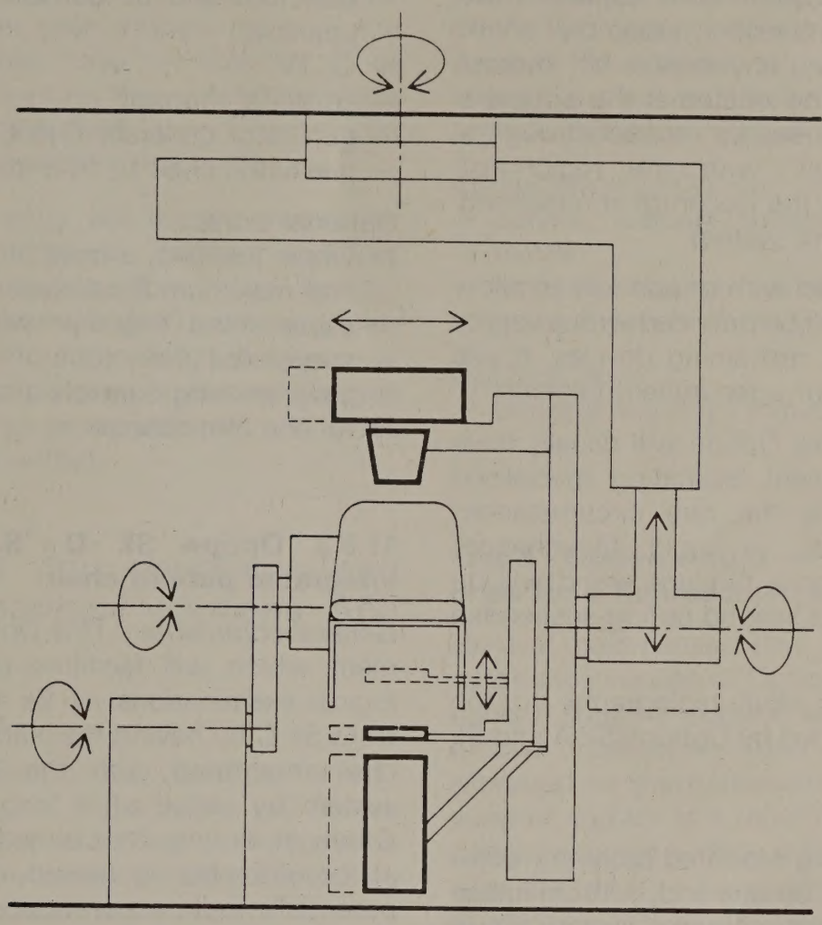

Option Sk C – 'Somersaulting' with independent patient support (paragraph 11.2.3)

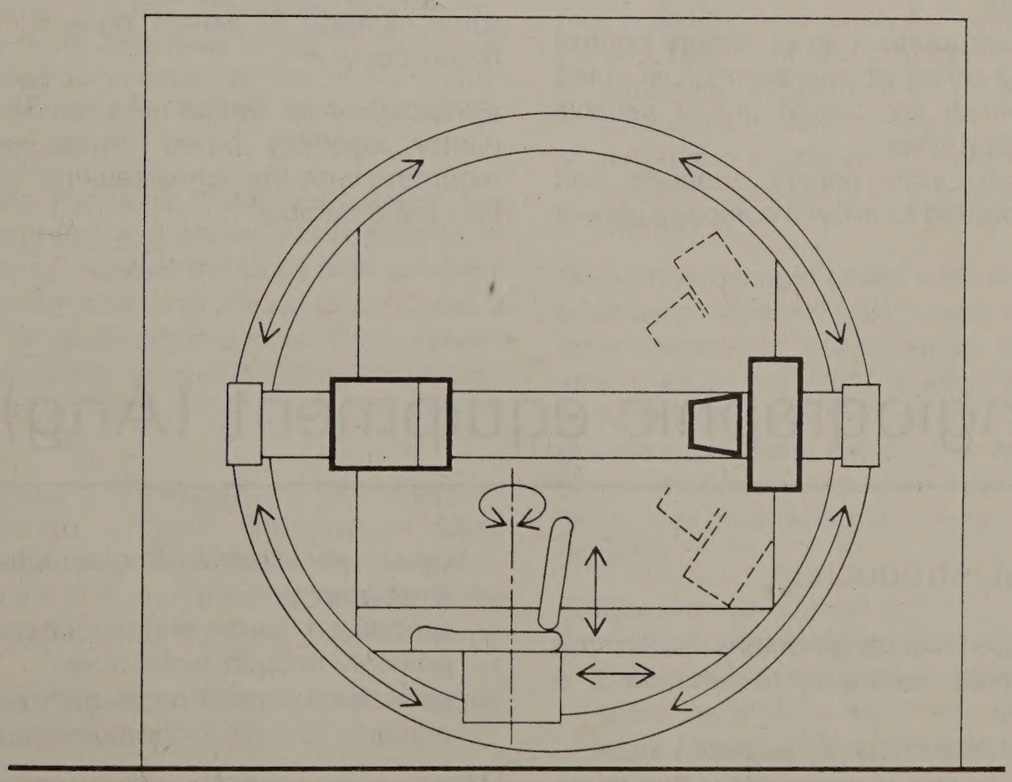

Option Sk D – 'Somersaulting' with integrated patient chair (paragraph 11.3.3)

It will have variable height adjustment. Provision will be made to locate the chair and its support gantry in a precise position with respect to the X-ray tube/image intensifier assembly. With the chair in position, any region of interest within the skull may be located at the isocentre and then the patient may be rotated through a complete 'somersault' with the region of interest remaining at the isocentre ie remaining in view of the imaging system.

The chair will be provided with an aperture to allow lumbar puncture and will be provided with a variety of patient support and restraining devices. It will usually be convertible for a recumbent position.

Any centre justifying this Option will usually have ready access to equipment facilitating specialised cranial angiography. In the rare circumstances where this is not so, a rapid film-changer (24 × 30cm) mounted on a bi-plane stand will be required together with a second ceiling-suspended X-ray tube.

The equipment allows skull radiography to the same standard as provided by Options Sk A and Sk B.

Composition of Option
- a floor, wall or ceiling mounted assembly comprising an arm with, on one end, a 15cm image intensifier and a cassette/'Bucky' system allowing tomography and, on the other, an X-ray tube. The whole assembly will be mounted and pivoted to allow any view of the skull on an isocentric principle.
- most units incorporate a small remote control box permitting effective operation of all stand movements which are carried out at variable speeds (including chair)
- a patient chair, with patient supports and harnesses, mounted to allow a complete patient 'somersault' rotation around a vertical axis and variation in height. The chair will allow lumbar puncture and be convertible for a recumbent position.
- CCTV
- small TV monitor
- generator generally Gen C or D
- paediatric chair to fit onto normal adult chair

Optional extras:
- where justified, a rapid film-changer (24 × 30cm and maximum 6 per second) mounted on a bi-plane stand together with a second ceiling-suspended X-ray tube
- programming controls and a generator suitable for the film-changer

11.3.3 Option Sk D – 'Somersaulting' with integrated patient chair

General comments This Option comprises equipment which will facilitate the same neuroradiological examinations as Sk C. It is distinguished from Sk C by having the isocentric 'somersaulting' chair integrated with the X-ray tube/ imaging system by virtue of a 'ring gantry' or rotatable C-arm mounting. Its claimed advantage, achieved at considerable increased cost, is quicker and potentially more accurate positioning. In a version where a rapid film-changer is permanently mounted in front of the image intensifier, a further advantage is less delay in the changeover from fluoroscopy to radiography. However in this case some increase in patient dose will result during fluoroscopy.

Composition of Option As for Sk C but with a gantry assembly based on a 'ring' or C-arm mounting with the 'somersaulting' chair integrated into the assembly.

12 Angiographic equipment (Ang)

12.1 General introduction

Equipment required for angiography is, in this Chapter, considered according to whether it is primarily suited to
- peripheral and abdominal angiography only
- general angiography ie peripheral, abdominal, thoracic and cranial angiography but not dedicated to cranial angiography or cardio-angiography
- specialised cardio-angiography and dedicated primarily to such techniques
- specialised cranial angiography and dedicated primarily to such techniques

There will obviously be some overlap between the above divisions. For example many U and C-arm

stands are sufficiently versatile in their basic features to be incorporated in installations for either general angiography or 'dedicated' cranial angiography. However even though many of the Options described may have an identical C or U-arm as a common feature, they will nevertheless be distinguished by the other components with which they will be installed.

Although all angiography will require means for injection of contrast medium, contrast injectors are not listed in the composition of any option. Choice of contrast injector is dealt with separately in paragraph 12.6. It should be noted that some of the equipment assemblies in sophisticated Options will not operate unless an appropriate and often complex injector is provided.

12.2 Equipment for peripheral and abdominal angiography (Options Ang A to Ang C)

12.2.1 Introduction

In many small radiodiagnostic departments peripheral and/or adbominal angiography will not be undertaken at all, and in others will rarely be undertaken. In the latter case a simple addition to a standard fluoroscopic table will suffice.

In larger radiodiagnostic departments a significant number of such examinations may need to be undertaken but the workload will rarely justify facilities dedicated to such techniques. In these circumstances a more extensive range of additional features will need to be added to one of the fluoroscopic tables in the room where such procedures are to be undertaken.

In a large radiodiagnostic department where the number of peripheral and abdominal angiographic examinations may be expected to be high or where a clinical speciality located in a hospital produces a high demand for such angiography which cannot be conveniently undertaken at another site, equipment dedicated primarily to angiography may be justified.

It should be noted that most of the Options given below incorporate a rapid film-changer (35 × 35cm). It is assumed that an overhead tube is accessible where it is not integral as with some fluoroscopic tables.

12.2.2 Option Ang A – 'Manual' accessories for a fluoroscopic table

General comments A limited amount of angiography can be satisfactorily undertaken with the facilities provided by a fluoroscopic table plus a patient support surface fitted with rollers on its under surface and arranged with one end resting on the fluoroscopic table and the other on a trestle. A rapid film-changer is placed below the patient support surface and the latter is moved manually to achieve exposures spaced along the limb.

Composition of Option
- patient support surface with floor support/trestle
- rapid film-changer usually 3 per second and no greater than 6 per second

Optional extra:
- bi-plane stand for film-changer if justified

12.2.3 Option Ang B – Automated accessories for a fluoroscopic table

General comments This Option is basically an automated version of Option Ang A. It comprises a patient support surface/table top attached to a mobile framework fitted with a motor drive. Mounted on the framework and below the patient support surface is a rapid film-changer. In use the patient support surface is located at the end of and over the top of a fluoroscopic table.

The arrangement allows a patient on the support surface to be positioned for initial fluoroscopy, while for angiography the support surface can automatically move in three or four steps (four or five exposure positions). Full utilisation requires a kV reduction unit and a programme selector for
- automatic adjustment of kV to selected values for each exposure position
- automatic exposure of films at each exposure position according to a pre-selectable rate and number

Some fluoroscopic tables with an integrated over-table tube (Option F1 D) have a longitudinal range of movement of the table-top and tube support which will be sufficient to allow angiographic procedures with a rapid film-changer positioned under the table overhang. Where the range of movement of the integrated over-table tube is insufficient, an extra ceiling-suspended X-ray tube may be required.

Composition of Option
- motorised patient support surface on mobile base unless the range of movement of the table-top is sufficient
- rapid film-changer not exceeding 6 per second
- kV reduction unit
- film programme selector

12.2.4 Option Ang C – Angiographic/general purpose fluoroscopic tables

General comments This option comprises those general purpose fluoroscopic tables with integral over-table tubes (Options Fl D or Fl E) which are designed to facilitate angiography and in particular to accommodate a rapid film-changer below the table-top as a design feature. Such tables can readily be linked to devices and controls which will provide automatic step-wise movement of the table-top (3/4 steps ie 4/5 exposure positions), a kV reduction unit for automatic adjustment of kV to preselectable values for each exposure position and a film programme selector for automatic exposure of films at each exposure position according to a preselectable number and rate.

Composition of Option Add-on devices/conversion for a fluoroscopic table Option F1 D or F1 E giving

- automatic stepping of the table-top
- a kV reduction unit
- a film programme selector
- a rapid film-changer usually 3 exposures per second (not greater than 6 per second)

12.3 Equipment for general angiography (Options Ang D and E)

12.3.1 Introduction

Options so far described are suitable for peripheral and abdominal angiography but are not well suited for examinations extending to the thorax. The two Options described below under this sub-heading are not only dedicated to peripheral and abdominal angiography but also facilitate examinations within the thorax and cranial angiography particularly with a C or U-arm. They are not however ideal for specialised selective coronary and cardiac angiography or for specialised cranial angiography. Options for such work are described under sub-heading 12.4 and 12.5.

Whereas Options Ang A, B and C are primarily extensions of a general radiographic or fluoroscopic facility to allow angiography in addition, the following Options Ang D and E are dedicated to angiography and will usually be installed in a room reserved for such procedures. They will therefore be chosen only where a sufficiently high demand for such procedures exists to utilise fully a dedicated facility.

12.3.2 Options Ang D (AP/PA projections only)

General comments This Option facilitates only AP/PA viewing. It comprises a complete assembly of equipment installed in a configuration suitable for peripheral, abdominal and thoracic angiography and dedicated to this purpose although it lacks the freer choice of views important in the thorax and abdomen offered by a C or U-arm (see Ang E). It is more limited in its application to cranial angiography than Option Ang E. It comprises a tunnel or pedestal-type, floating-top table with an automatic stepping facility providing 3/4 steps, ie 4/5 exposure positions and may have 15° head-down tilt at one or perhaps both ends. The table may be variable in height to allow limited magnification. A rapid film-changer allowing no greater than 6 exposures per second will be required. The image intensifier/rapid film-changer/X-ray tube configuration could be either of the following:

(a) an image intensifier with a rapid film-changer (usually 3 per second) mounted so as to move automatically in front of the intensifier at initiation of angiography and usually installed under the table with an X-ray tube ceiling-suspended over the table.

(b) an image intensifier and rapid film-changer (usually 6 per second) each mounted on a mobile stand on floor tracks so that the image intensifier can be manually moved out from under the table and the film-changer moved in prior to initiation of angiography. An X-ray tube will be ceiling suspended over the table.

(c) an image intensifier and X-ray tube over the table (often sharing a ceiling support) with an X-ray tube and a rapid film-changer under the table. The whole assembly will be linked so that the over-table tube and under-table changer automatically move, at the initiation of angiography, to take the place of the over-table intensifier and under-table tube.

Arrangement (c) is the most common and requires two X-ray tubes. Arrangements (a) and (b) require only one X-ray tube.

The range of movement of the table-top will allow coverage of the thorax in addition to the abdomen and extremities.

The generator and film-changer will be provided with a kV reduction unit for automatic adjustment of kV to pre-selectable values for each exposure position and a film programme selector for automatic exposure of films at each exposure position according to a pre-selectable rate and number.

In configurations (a) and (b) the image intensifier is below the table whilst in configuration (c) it is above. With an intensifier above the table there will be less radiation scatter to the staff, a less accessible primary X-ray beam and the intensifier can be brought closer to the patient. With the intensifier below the table, in configuration (a) or (b) the X-ray beam projection will be the same for the film-changer as for the intensifier, focus-to-object distance can be varied widely, and there is improved access to the patient. There will also be a need for only one X-ray tube compared with two in (c).

Composition of Option
- tunnel or pedestal-type, floating-top table with automatic stepping and 15° head-down tilt at one or both ends and possibly variable height
- image intensifier and rapid film-changer (not exceeding 6 per second)
- X-ray tube (two tubes for arrangement (c))
- kV reduction unit
- film programme selector
- generator Option Gen D

Optional extras:
- rotating cradle for patient
- facility to adjust the table-top height

12.3.3 Option Ang E – Multi-directional projections using a C or U-arm

General comments This Option, based on equipment with a C or U-arm, comprises a complete assembly of equipment installed in a configuration suitable for peripheral, abdominal and thoracic angiography. It will facilitate some cranial angiography but will be limited in this application by the 35 × 35cm rapid film-changer (a 24 × 30cm rapid film-changer is preferable see paragraph 12.5.1). Also some cardiac angiography will be possible primarily related to the major vessels in the thorax but its application will be limited due to the absence of cine and simultaneous bi-plane facilities.

The distinguishing features are:

(a) A floor-mounted U-arm or ceiling suspended C-arm installed at the end of a table, (see below) with an X-ray tube on one arm and an image intensifier plus a rapid film-changer as a single assembly on the other. When angiography is initiated the rapid film-changer automatically moves to take a position in front of the intensifier.

(b) a floating-top table with an automatic stepping facility providing 3/4 steps, ie 4/5 exposure positions. The longitudinal table-top movement allows an extensive overhang to accommodate the U-arm or C-arm X-ray tube/intensifier support. It is possible for the table to be ceiling suspended.

The depth of the U-arm or orientation of the C-arm together with the extent of metal-free overhang allowed by the table design, will allow examinations from the feet to the thorax with the patient positioned feet into the U or through the C and will allow examinations from the head to the abdomen with the patient positioned head into the U or through the C. The U or C arm is rotatable around the table overhang allowing AP, PA, lateral and any intermediate configuration. The X-ray tube is mounted in a manner allowing cranio-caudal or caudo-cranial angulation. A C-arm generally provides for a greater variety of projections.

The equipment assembly is completed by the provision of a generator, a kV reduction unit providing automatic adjustments of kV at each exposure position according to pre-selectable values and a film programme selector providing automatic film exposure at each exposure position according to a pre-selectable rate and number.

Composition of Option
- floating-top table with automatic stepping and extensive overhang (may be ceiling suspended)
- floor-mounted U-arm or ceiling suspended C-arm with X-ray tube, image intensifier and rapid film-changer
- film programme selector
- kV reduction unit
- generator Option Gen D

12.4 Equipment dedicated to selective coronary and cardio-angiography (Options Ang F to Ang H)

12.4.1 Introduction

The principal design feature of a selective coronary and cardio-angiography system is the ability to direct the X-ray beam at a variety of angles on to a supine patient. This can be achieved either by rotating the patient or by rotating the X-ray tube/imaging system around the patient. The former is usually achieved using a tunnel-type table with a rotating cradle whereas the latter may employ one of a range of dedicated cardiac examination stands based on the U or C-arm principle. Whereas the Options described under sub-heading 12.3 facilitate limited cardiac angiography eg of the major blood vessels in the thorax, they are primarily designed for more general angiography and lack the more

dedicated features necessary for undertaking a reasonable workload of specialised cardio-angiography and selective coronary angiography examinations (eg they do not include cine 'simultaneous' bi-plane facilities). This sub-heading deals with equipments designed specifically for such work. They will be installed in rooms dedicated to cardio-angiography work and will therefore be chosen only where a sufficiently high demand for such procedures exists. Because of their very high costs they will normally be a regional facility.

Provision for 'simultaneous' bi-plane pulsed cine-radiography will be usual if an installation is to be suitable for *all* specialised cardio-angiography, ie for paediatric and adult examinations as follows:

- general cardio-angiography
- selective coronary angiography
- valvular disease
- left ventricular function
- pacemaker insertions
- congenital heart disease

Where, rarely, an installation is dedicated only to coronary examinations a 'simultaneous' bi-plane facility will not be necessary (see Option Ang H) and an intensifier with a maximum input field size of 15cm may be preferred to one with 23cm.

Pulmonary examinations and trauma cases requiring, for example, examinations of the aortic arch and aneurysms will require large film (35 × 35cm) 'direct' radiography. In these circumstances a large-sized rapid-film changer will be required together with programme controls and possibly an extra ceiling-suspended X-ray tube. Whether such a provision is justified will depend on whether a 'general angiography' facility (Option Ang E) is readily accessible. Use of such a facility will not only save costs but may also provide a better standard of examination.

All the Options described are based on a C or U-arm. Whereas an installation could comprise an assembly of equipment based on ceiling-suspended and under-table X-ray tubes and image intensifiers, Options based on such an approach are not described since they offer no radiological advantages and in general result in little, if any, savings in cost.

The situation regarding 100mm (or equivalent) photofluorography and large-size rapid-film radiography is discussed in paragraph 12.7.

It is important to note that the following deals only with radiological equipment assemblies. There are many other aspects of considerable importance in designing a cardiac angiographic suite but which are not within the scope of this Equipment Note.

12.4.2 Option Ang F – Rigid C and U-arm equipments

General comments C and U-arm equipments comprise an assembly with an image intensifier and cine camera located at one extremity of the arm and an X-ray tube on the other. The arm is located to embrace the head-end of a floating-top, variable height, pedestal table and can rotate around the table overhang through almost 360°. This facilitates not only AP/PA and left and right lateral viewing, but also any lateral oblique view. 'Simultaneous' bi-plane examinations are achieved with a second X-ray tube and image intensifier/cine camera, both ceiling suspended.

Differences between rigid C and U-arm equipments are basically as follows:

- U-arm equipments are floor-mounted whereas C-arm equipments may be ceiling-mounted
- the length of the throat of a U-arm significantly exceeds that of a C and this may allow angiographic examinations more readily to be extended well below the heart, even to the femoral area
- a C-arm has a suitable shape to allow the whole arm to rotate in the plane of the C. Thus, whether the C embraces the table from the side or the head end, AP, PA, oblique and in particular cranio-caudal views can be obtained without moving the patient or the table. Furthermore, for all projections, the central axis of the X-ray beam remains perpendicular to the intensifier input face. A rigid U-arm is normally orientated to embrace the head-end of the table which allows AP, PA and oblique views without moving the patient or the table. However cranio-caudal views can be obtained only either by reorientating the table or, if the facility exists, by angulating the X-ray tube. With the latter arrangement the central axis of the X-ray beam will not be perpendicular to the intensifier input face. In general a C-arm allows a greater variety of projections without the need to move the table or patient.

For patient preparation or unimpeded access in emergencies, either the whole arm will be rotated away from the table or the table will be rotated out of the arm.

A variable height facility for the intensifier will allow it to be positioned close to the patient for any projection. A variation height table (combined perhaps with a variable height arm) will allow the axis of rotation of the arm to be coincident with the heart axis of interest.

Composition of Option

- C or U-arm floor or ceiling mounted, rotatable

through up to 360° about a horizontal axis with perhaps vertical height adjustment and perhaps rotation around a vertical axis, with an X-ray tube at one extremity and an image intensifier (15/23cm) and cine camera 50 – 150 fps) on the other. There may be facility to vary the intensifier to X-ray tube distance by moving the intensifier
- floating-top, variable height pedestal table which may be rotatable around a vertical axis or may be mobile
- second X-ray tube and second image intensifier (15/23cm)/cine camera (50 – 150 fps) combination both ceiling suspended
- programme selectors and density controls for cine cameras
- automatic brightness control units for intensifiers
- two CCTV systems with trolleys or suspensions
- two small TV monitors
- generator Gen E suitable for simultaneous bi-plane pulsed cine (see Chapter 6 paragraph 6.12)
- two videotape recorders

Optional extras:
- extra pair of small TV monitors

12.4.3 Options Ang G – Variable-geometry U-arm

General comments The disadvantage of a rigid U-arm version of Option Ang F is the less convenient methods of achieving a cranio-caudal projection. The latter can be important in separating the images of coronary vessels where confusion exists even with an AP/PA and a lateral or lateral oblique view. However it should be noted that C-arm versions of Option Ang E do conveniently facilitate such views (see paragraph 12.4.2).

A variable-geometry U-arm overcomes this disadvantage. It comprises a U hinged at its corners so as to be able to take up a variety of parallelogram configurations other than the simple rectangle. The arrangement also ensures that the X-ray tube and image intensifier automatically tilt to keep the heart within the centre of view and to ensure that the central axis of the X-ray beam remains perpendicular to the input face of the intensifier. Other than the special construction of the U-arm this Option is identical with the rigid U-arm versions of Ang F. It is, however, somewhat more expensive and will be considered where, for example, significant numbers of selective coronary investigations are undertaken which dictate a need for a cranio-caudal projection.

Composition of Option As for the U-arm version of Ang F (paragraph 12.4.2) except for the substitution of a variable-geometry U-arm for a rigid U-arm.

12.4.4 Option Ang H – Equipment dedicated to selective coronary examinations

General comments Installations dedicated to selective coronary examinations and without the facilities for more general cardiac angiography will rarely be justified. However where such an installation is to be provided, a bi-plane facility will not be necessary. This Option will thus be as for Options Ang F or Ang G but without the second ceiling suspended image intensifier/cine camera and X-ray tube and without the need for a generator suitable for simultaneous bi-plane radiography. The cranio-caudal view will be most important in this work and thus the limitations of the rigid U-arm version of Ang F should be noted in this respect. An intensifier with a maximum input field size of 15cm may be preferred to one with 23cm.

Composition of Option As for Ang F or Ang G but
- excluding the second ceiling suspended image intensifier/cine camera and X-ray tube
- only one CCTV system
- only one small TV monitor
- only one videotape recorder

Additionally the generator will not need to provide for simultaneous bi-plane work and a 15cm image intensifier may be preferred to a 23cm intensifier.

12.5 Equipment dedicated to cranial angiography (Options Ang I and J)

12.5.1 Introduction

A 'General Angiographic' Option, particularly Ang E, will facilitate an occasional cranial angiographic examination but will be limited by the use of a 35 × 35cm rapid film-changer rather than a preferable smaller changer (24 × 30cm). However where cranial angiography is undertaken using a magnification technique the larger film-changer will not be a disadvantage: indeed it will be necessary. The neuroradiological Options (Sk D and Sk E) which would be purchased primarily for pneumoencephalography, may also facilitate cranial angiography.

For limited and occasional cranial angiography, there are available manually operated film-changers (some on a bi-plane stand) which may be

used with a radiographic table or with a skull radiographic unit Sk A (when two specially shaped lead-rubber aprons will be required). Such an arrangement will be chosen rarely since cranial angiography is best undertaken only where adequate, experienced radiological expertise is available: these circumstances would be expected to arise only where a high workload of cranial angiography exists and where therefore a more specialised and dedicated facility would be justified.

The two Options described under this sub-heading are dedicated to cranial angiography and will therefore be chosen only where there is a large cranial angiographic workload which cannot be undertaken with accessible general angiographic or other specialised neuroradiological equipment.

12.5.2 Option Ang I – AP/PA and lateral projections only

General comments An equipment within this Option comprises a complete assembly facilitating basically AP/PA and lateral projections only, and in this respect is more limited in application than Option Ang J. It comprises a tunnel or pedestal-type, floating-top table which may have 15° head-down tilt at one or perhaps both ends. The table may be variable in height to allow limited magnification. A rapid 24×30cm film-changer will be required allowing no greater than 6 exposures per second but usually about 3 per second. The image intensifier/rapid film-changer/X-ray tube configuration for AP/PA projections could be either of those described for Option Ang D. The advantages and disadvantages of the various configurations are generally as described for Ang D but it should additionally be noted that:

- most procedures will be conducted under general anaesthesia. An over-table tube configuration will provide more space for anaesthetic connections to the patient;
- radiation dose to the patient's eyes will be substantially lower with an under-table tube configuration.

'Simultaneous' bi-plane radiographic operation will be achieved by the addition of a lateral rapid film-changer and a tube with a generator(s) appropriate to 'simultaneous' operation (see paragraph 6.12).

Composition of Option

- tunnel or pedestal-type, floating-top table
- image intensifier and rapid film-changer
- AP/PA X-ray tube (two tubes if the image intensifier is above the table)
- lateral tube ceiling suspended
- lateral rapid film-changer
- generator(s) Gen C suitable for 'simultaneous' bi-plane work (see paragraph 6.12)

Optional extras:

- facility to adjust the table-top height

12.5.3 Option Ang J – multi-directional projections using a C or U-arm

General comments An equipment within this Option comprises a floor or ceiling-mounted C-arm (or U-arm) with an X-ray tube on one extremity and an image intensifier/rapid film-changer combination on the other. The C-arm will be able to pivot so as to embrace a floating-top, variable-height pedestal table from the head-end or from the side. This will allow AP, PA, lateral and any other intermediate view and also cranio-caudal or caudo-cranial tilt. The rapid film-changer (usually 3 per second but not exceeding 6 per second) will be 24×30cm or thereabouts and will either move into position in front of the intensifier at initiation of angiography or be permanently situated in front of the intensifier. Because of the absorption in the screens the latter arrangement leads to some increased dose to patients during fluoroscopy. In order to keep such an increase to a minimum, screens with less absorption and thus less sensitivity may be used.

'Simultaneous' bi-plane radiography will be usual and be achieved by a second floor-mounted lateral rapid film-changer and a second ceiling-suspended X-ray tube. The assembly may allow tomography in any plane.

Composition of Option

- floor or ceiling-mounted C-arm (or U-arm) with an X-ray tube on one extremity and an image intensifier (usually 15cm)/rapid film-changer (24×30cm) on the other. A pivoting arrangement will allow the arm to embrace the table from the head end or from the side and will allow cranio-caudal or caudo-cranial tilt
- variable height, floating-top pedestal table (a ceiling suspended table is an alternative)
- possibly a facility for tomography in any plane
- second floor-mounted rapid film-changer (24×30cm) and second ceiling-suspended X-ray tube for bi-plane work
- programming unit for rapid film-changer
- CCTV system
- small TV monitor
- generator(s) Gen C suitable for 'simultaneous' rapid-film bi-plane radiography (see paragraph 6.12)

Optional extras:

- one videotape recorder

12.6 Contrast injectors

In angiography, contrast medium is introduced into the vascular system through a cannula or catheter, the nature of the examination determining the amount and flow velocity. Although it is usual in some examinations to inject contrast medium with a manually-operated syringe, most examinations are conducted using a power-operated syringe with power either being electrical or deriving from a gas cylinder. The latter mode is now rarely chosen and this paragraph concentrates on automatic electrically powered contrast medium injectors.

An injector should at least provide a heated, electrically-isolated power-driven syringe with over-pressure/excess volume/excess temperature protection, have a range of volumes and flow-rates from which a selection can be made and allow an injection to be timed in relation to an X-ray exposure. Some injectors allow the use of disposable syringes and some allow the syringe and injector mechanism to be mounted on the table which is advantageous where the table-top is moved during a procedure eg stepped movements. The maximum volume of medium accommodated in the syringe may be an important factor to consider.

It is advantageous for the timing of a contrast injector to be controllable via the programming unit of the rapid film-changer, but independent control is also essential.

In some circumstances eg cardio-angiography, an accessory to allow an injection to be triggered by an ECG signal will be necessary. Also, particularly in cardio-angiography, a facility to control the rate at which the flow of the medium builds up to its selected maximum will be very important.

Injectors can be purchased in modular form to allow upgrading for increased sophistication.

12.7 100mm Photofluorography in general, cardiac and cranial angiography

For general angiography, photofluorography (see paragraph 10.9) using a 100mm (or equivalent) camera is limited by the circular and relatively small field of view of an image intensifier (usually 23cm diameter). The coverage of the latter is appreciably restrictive compared with that of the 35×35cm rapid film-changers normally used. Thus only in special circumstances would a 100mm (or equivalent) camera be supplied for general angiography.

For cardio-angiography, photofluorography is undertaken in some centres for rather special purposes but it is not established as a routine tool and a special case would need to be made for its provision. Need for such a provision is further reduced because of the high quality of cine radiography with modern equipment and the requirement for two contrast medium injections if both cine and photofluorography are to be undertaken. It should also be noted that with cine the TV image can be readily followed during exposure but with photofluorography the effect of flicker is more obtrusive.

In cranial angiography, the small field of view of a 23cm intensifier will not be restrictive as in general angiography (see above) and photofluorography may have a role for such examinations.

12.8 Automatic setting of optimum cine conditions by pre-examination radiation pulses

Some generators provide a facility automatically to adjust exposure factors to an optimum by delivering a few pulses of radiation to the patient just prior to initiation of a cine run. The extra radiation dose to the patient will be very small compared with the total from the examination. Such a device relieves a radiographer from the task of setting conditions by means of the test run facilities usually provided and is claimed to lead to more consistent, higher quality results. Extra costs may however be entailed which will require justification.

12.9 Basic patient monitoring facilities

Cardiac catheterization is a procedure involving the introduction of a catheter via a vein into the right side of the heart or via an artery eg into the left ventricle. Such a procedure is not without risk and it is essential that equipment is provided to monitor the patient's condition.

Such patient monitoring equipment will at least comprise a 2-channel ECG with 3-channel blood pressure facilities. At least one and perhaps two large video monitor displays will be required which can with advantage be a type which display ECG and blood pressure waveforms superimposed on the X-ray image. A suitable chart recorder may be required. In some circumstances the ECG signal may be required to trigger the contrast medium injector (see paragraph 12.6).

Angiographic equipment (Ang)

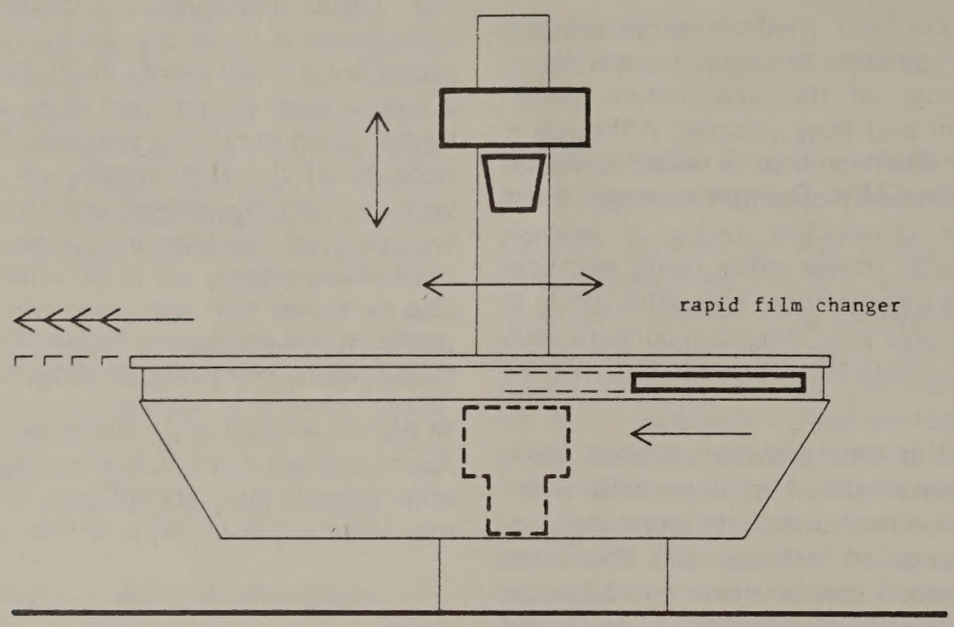

Option Ang C – Angiographic/general purpose fluoroscopic table (paragraph 12.2.4). Peripheral and abdominal angiography

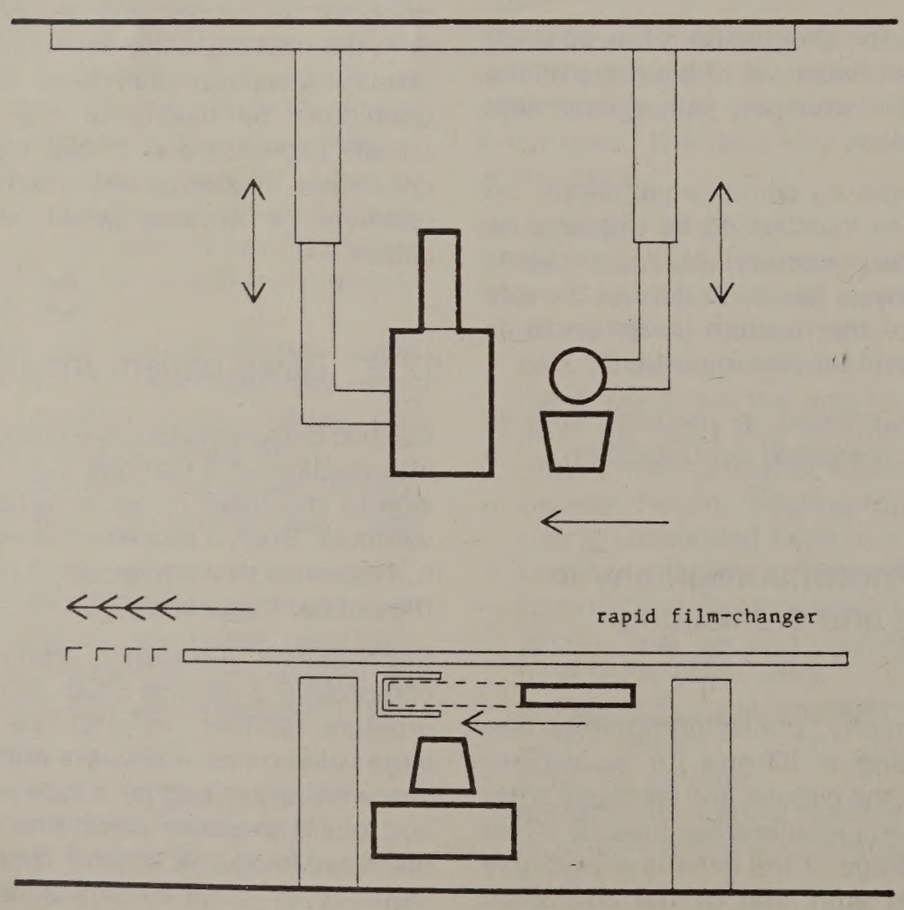

Option Ang D – Equipment assembly: AP/PA projections only (paragraph 12.3.2). General Angiography. Illustration shows only one possible arrangement

Angiographic equipment (Ang)

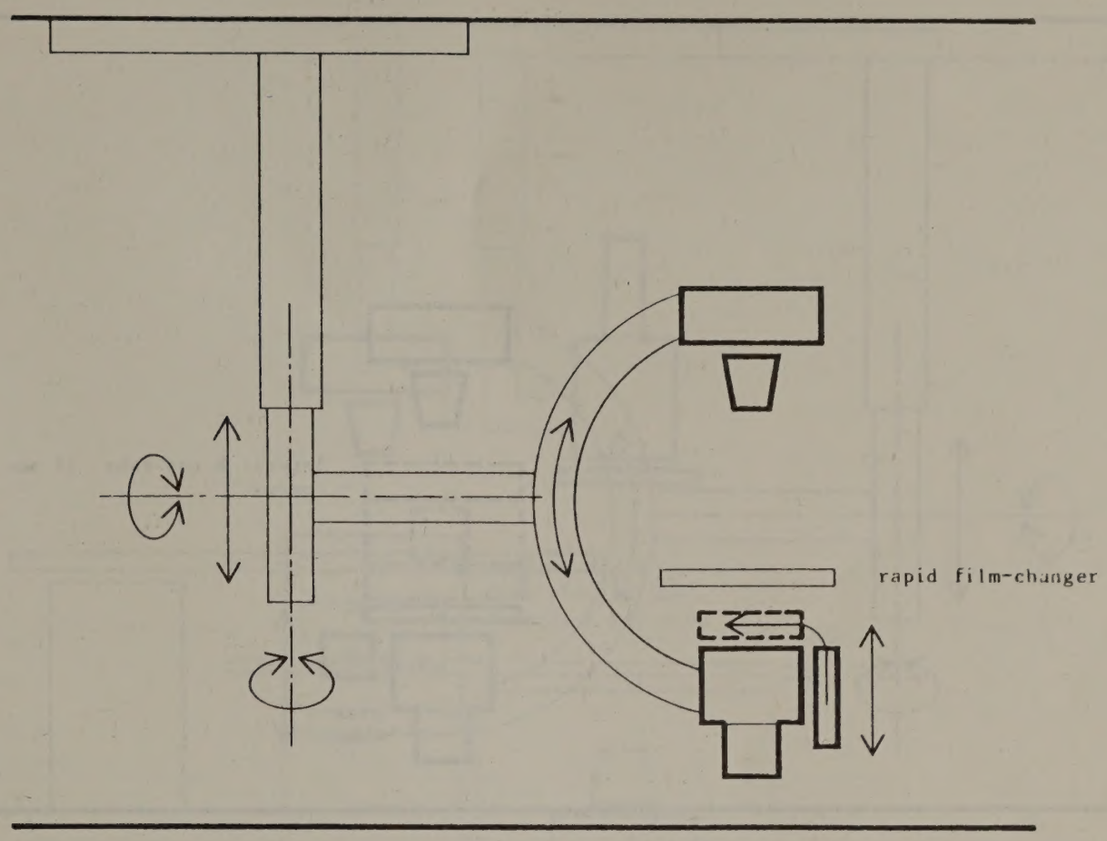

Option Ang E – Multidirectional projections using a C-arm (paragraph 12.3.3). General Angiography

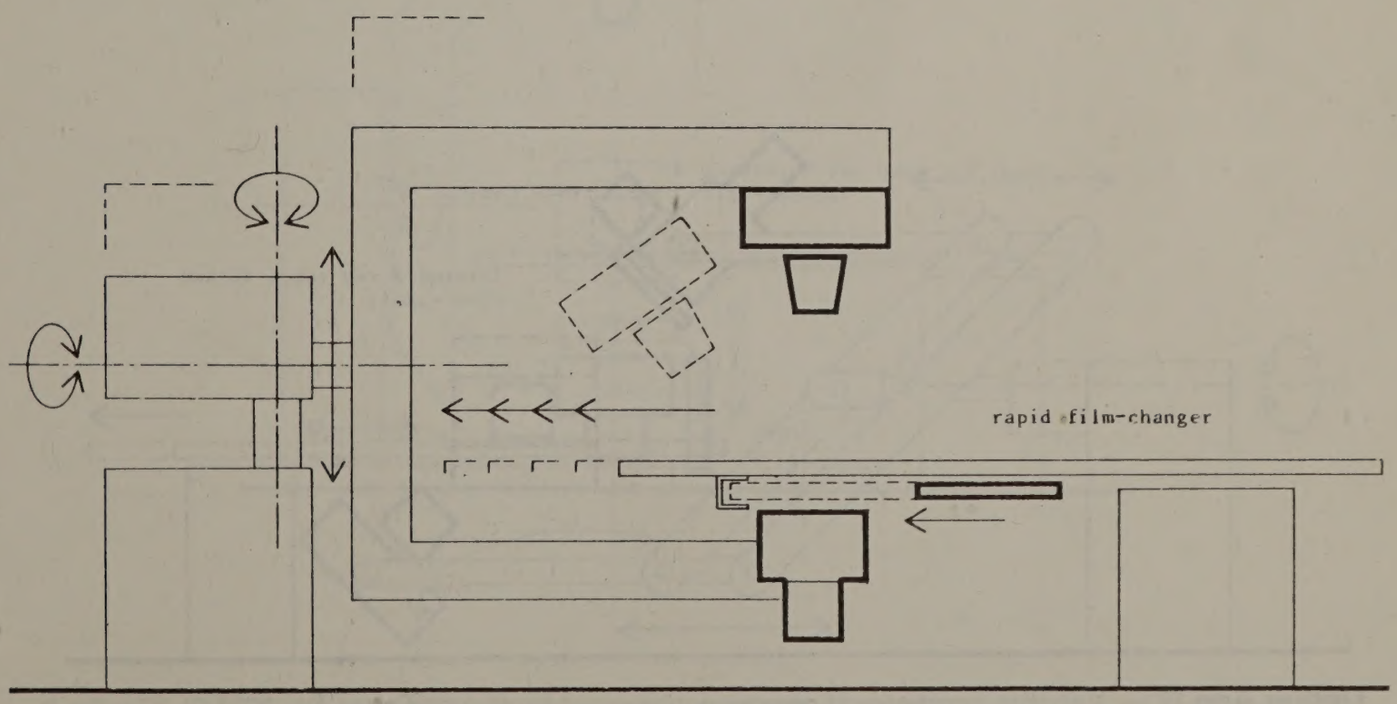

Option Ang E – Multidirectional projections using a U-arm (paragraph 12.3.3). General Angiography

Angiographic equipment (Ang)

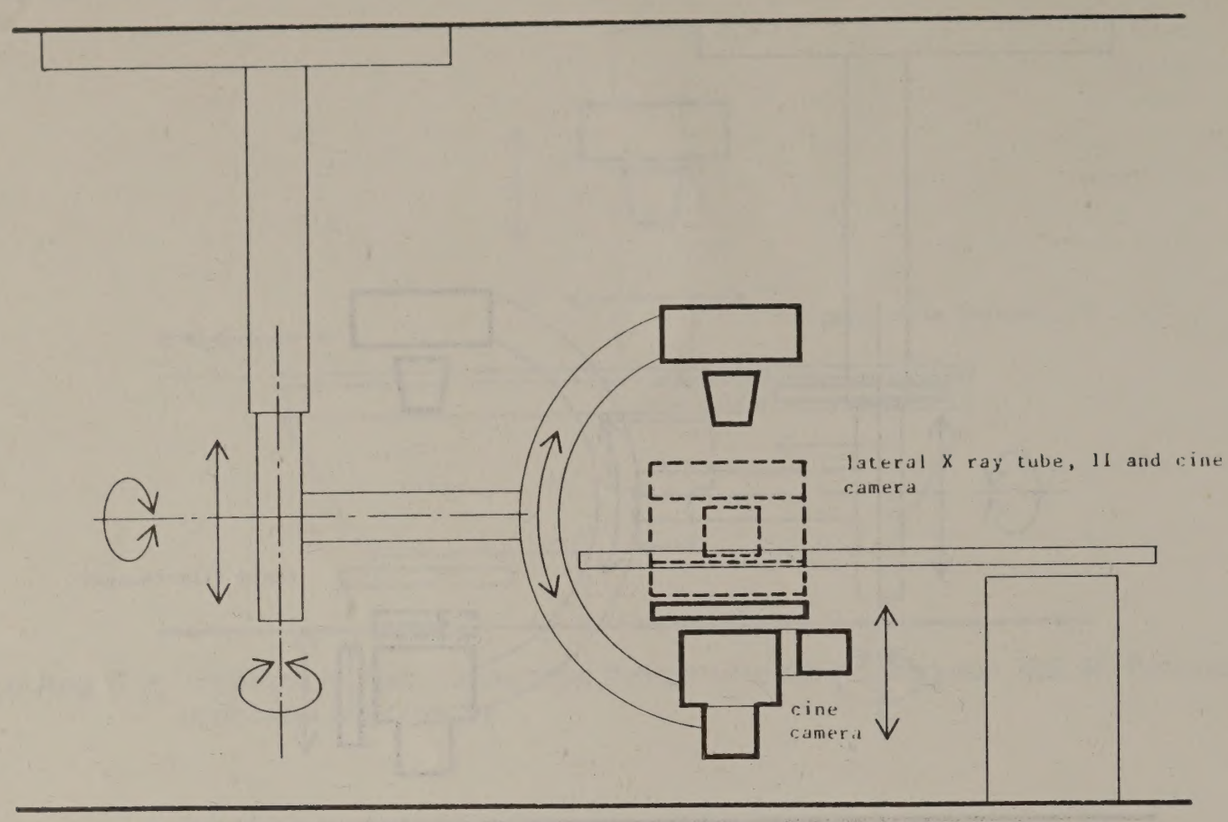

Option Ang F – Rigid C and U-arm equipments, 'simultaneous' bi-plane (paragraph 12.4.2) – C-arm version shown above. Cardio-angiography

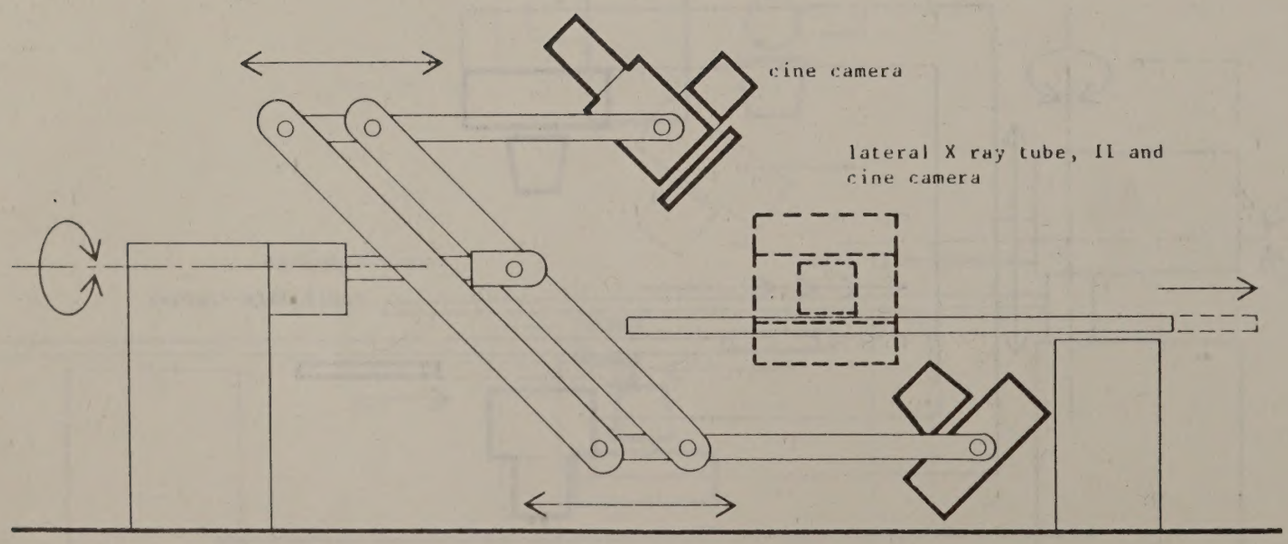

Option Ang G – Variable geometry U-arm 'simultaneous' bi-plane (paragraph 12.4.3). Cardio-angiography

Angiographic equipment (Ang)

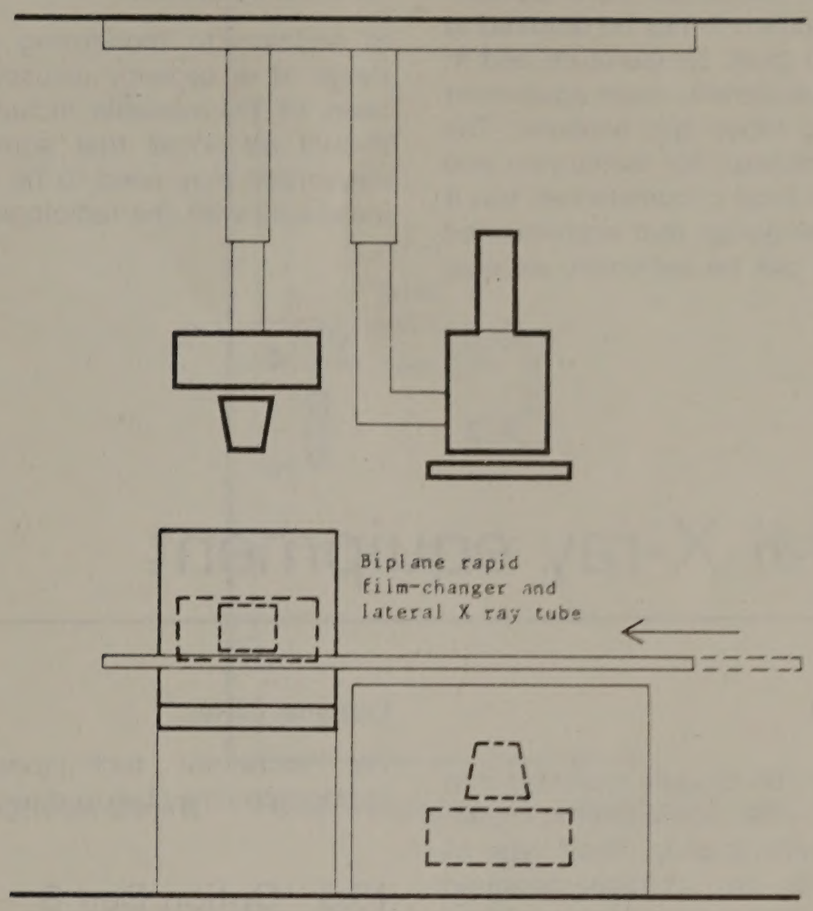

Option Ang I – Equipment assembly: AP/PA and lateral projections only with 'simultaneous' bi-plane (paragraph 12.5.2). Cranial angiography

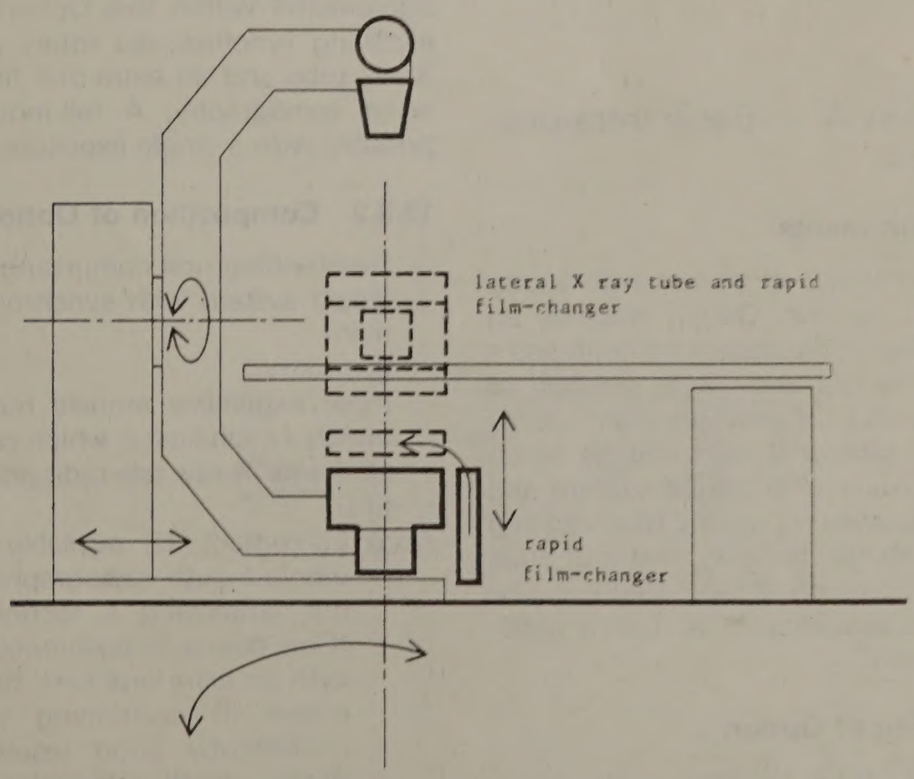

Option Ang J – Multidirectional projections using a C or U-arm, (paragraph 12.5.3). Cranial angiography

The above equipment is a minimum requirement. A case may be made for somewhat more sophisticated monitoring. In addition it may be required to monitor respiration and body temperature and in some circumstances considerably more equipment might be requested, eg blood gas analyser. The extent of equipment provision for monitoring and analysis will depend on local circumstances but it should be realised at the outset that sophisticated and extensive systems can be extremely expensive. A separate room/area will usually be required for such equipment.

In addition to monitoring equipment, a normal range of emergency resuscitation equipment will need to be available including a defibrillator. It should be noted that some patient monitoring equipment may need to be electrically related to/interfaced with the radiological equipment.

13 Dental X-ray equipment

13.1 Introduction

Dental examinations can be broadly classified into three types, ie intra-oral radiographic, pantomographic and tele-radiographic. Each type of examination requires its own purpose-designed equipment.

13.2 Option Den A – Basic intra-oral dental apparatus

13.2.1 General comments

The radiographic technique employed with equipment encompassed by this Option requires an X-ray film to be placed in the patient's mouth and a full-mouth survey would require a number of exposures. Equipment comprises an X-ray tubehead (ie X-ray tube and high voltage transformer in one enclosure) with a tube support and control unit. The apparatus is usually free-standing but the tube support may be wall, ceiling or chair mounted. Such equipment will more frequently be located in a dental department than in a radiodiagnostic department.

13.2.2 Composition of Option

- X-ray tubehead, tube support and control console with HT generator (50-70kV, 8-10mA)
- suitable range of cones

Optional extras:

For extra-oral techniques, normal cassette-radiography may be used requiring an angle-board.

13.3 Option Den B – Pantomographic equipment

13.3.1 General comments

Equipments within this Option employ a system involving synchronised rotary movements of the X-ray tube and an extra-oral film akin to conventional tomography. A full-mouth examination is possible with a single exposure.

13.3.2 Composition of Option

- freestanding unit comprising X-ray tube/film – linked system with synchronised rotary movement
- generator
- more expensive models may have facility to attach a cephalostat which can be used for conventional X-ray tele-radiography at 1.5 metres FFD

Note: Equipment is available which produces whole-mouth radiographs of a similar type but employing a technique whereby the X-ray source is positioned within the mouth with an extra-oral film. Because of the difficulties in positioning the X-ray source, consistently good results are difficult to obtain. Such pan-oral units are generally more expensive than units for pantomography.

Dental X-ray equipment (Den)

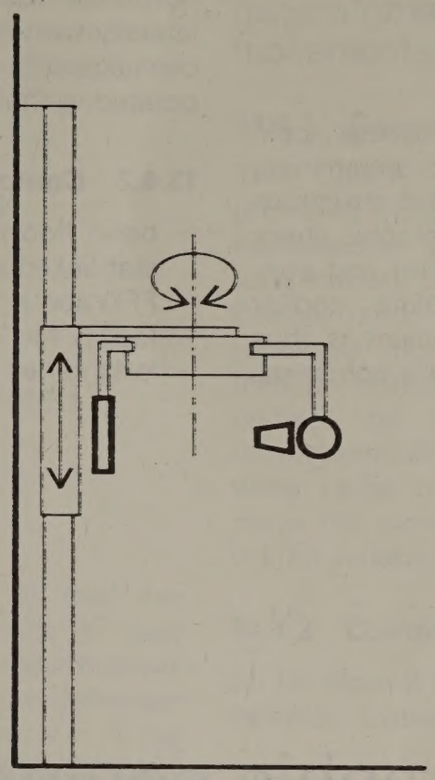

Option Den B – Pan-tomographic equipment (paragraph 13.3)

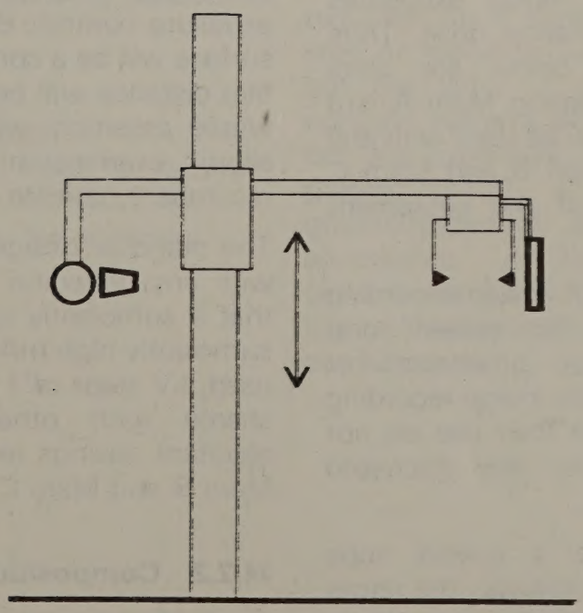

Option Den C – Tele-radiographic (Cephalostat) equipment (paragraph 13.4)

13.4 Option Den C – Tele-radiographic (cephalostat) equipment

13.4.1 General comments

Equipment within this Option has a special application in Orthodontic Centres for determining growth of jaws and associated facial structures where it is necessary to keep a radiographic check for comparison between the beginning and conclusion of treatment using absolute and/or cephalometric measurements. Equipment is thus precision built. The apparatus basically comprises a floor/wall-mounted vertical column carrying a horizontal cross-arm adjustable vertically and laterally with an X-ray tube at one extremity and a cephalostat at the other. A generator is not incorporated in the equipment.

13.4.2 Composition of Option

- basic floor/wall mounted X-ray tube/cephalostat linked system
- FFD about 1.5 metres
- facility for 18 × 24cm and 24 × 30cm cassettes
- long cone

14 Mammographic equipment (Mam)

14.1 Introduction

In the past, mammography has been undertaken by adapting conventional radiographic equipment to operate at a low kV and low filtration. However with the advent of purpose-designed mammographic stands, it is doubtful whether the provision of such adaptions and accessories is any longer warranted if high quality mammograms are to be achieved without the risk of repeat exposures involving unnecessary high radiation dose. Thus the only Options described below are units dedicated to mammography. Option Mam A is a mammographic stand which may be used with any suitable generator, whereas Mam B and Mam C include a generator as part of the equipment assembly.

All Options will allow choice of image recording systems, eg non-screen film, film/screen combinations vacuum packed or otherwise, or Xeroradiography plates. Thus the image recording and the accessories required for their use are not included in the Options: they are discussed separately in paragraph 14.5.

The Options will incorporate a special tube designed for mammographic exposures, the target of which will either by molybdenum or tungsten the former being usual.

14.2 Option Mam A – Mammographic stand

14.2.1 General comments

This Option comprises a mammographic X-ray tube/beam localising facility and a support surface for the breast, both attached to a stand. The support surface will be designed to accept a variety of image recording systems and automatic exposure control. Between the tube and support surface will be a compression device. The focus to film distance will be fixed at about 60cm and the whole assembly will be adjustable in height to allow examination of standing, seated or recumbent patients.

The stand is designed to operate in conjunction with any generator (preferably 3-phase) provided that a sufficiently low kV can be selected with a sufficiently high mA. It should provide in the range used, kV steps of 1 or 2 kV. The generator may be shared with other equipment with obvious resultant savings in cost compared with Options Mam B and Mam C.

14.2.2 Composition of Option

- mammographic X-ray tube/beam localising device connected to a breast support surface

designed to accept a variety of image recording systems. The assembly will be attached to a column, usually floor to ceiling mounted and will include a compression device. Rotation of the X-ray tube/breast support assembly may be possible
- a range of cones may be included
- automatic exposure control facility

Optional extras:
- patient chair

14.3 Option Mam B – Integrated generator and stand, limited movements

14.3.1 General comments

This Option differs from Mam A in that the equipment is designed to operate with its own 'dedicated' generator. The tube and breast support assembly will be attached to the X-ray generator control cabinet. A facility to rotate the X-ray tube/breast support assembly around a horizontal axis of about 270° will also be available. FFD may be variable.

Such equipment will be chosen where a separate room/self-contained area is necessary to handle a high workload or to ensure privacy. Such a room could however be equipped with Option Mam A plus its own generator.

14.3.2 Composition of Option

- mammographic tube/breast support/compression assembly as for Mam A but attached to a dedicated generator/control cabinet. The assembly will be rotatable around its horizontal axis
- dedicated integral generator
- automatic exposure control
- range of cones may be included
- radiation protective screen fixed to control cabinet
- magnification techniques may be possible

Optional extras:
- patient chair
- patient trolley

14.4 Option Mam C – Integrated generator and stand, extensive movements

14.4.1 General comments

This Option is distinguished from Mam B in providing a larger range of positioning facilities and movements. The equipment enables the X-ray tube/breast support assembly to be moved laterally and vertically as well as providing a rotational movement from X-ray beam vertical through horizontal to about 105° either side and perhaps up to 15° cranio-caudal. The extra movements allow more convenience in achieving a wider range of projections without the need to move the patient between projections. The FFD will be variable.

14.4.2 Composition of Option

As for Mam B but with more extensive positioning facilities. Optional extras as for Mam B.

14.5 Choice of image recording systems

Because of the very high radiation dose, the use of non-screen film, particularly industrial film, has now virtually ceased.

A variety of film/screen combinations are available designed for mammography at relatively low dose. A single screen is usual and vacuum packing preferable for which a vacuum packing device will be required. Such systems can be used with a tungsten or molybdenum target mammographic tube but the latter is generally preferred. Xeroradiography systems are available for mammography but are expensive. They will require Xeroradiographic plates, a conditioner and Xeroradiographic/processor and a number of other minor accessories. A Xeroradiographic system will generally be used with a tungsten target and a higher kV than generally utilised with film/screen combinations.

Mammographic equipment (Mam)

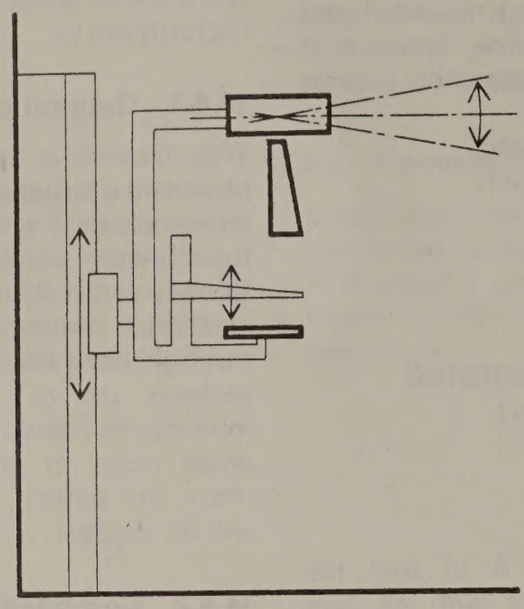

Option Mam A – Mammographic stand (paragraph 14.2)

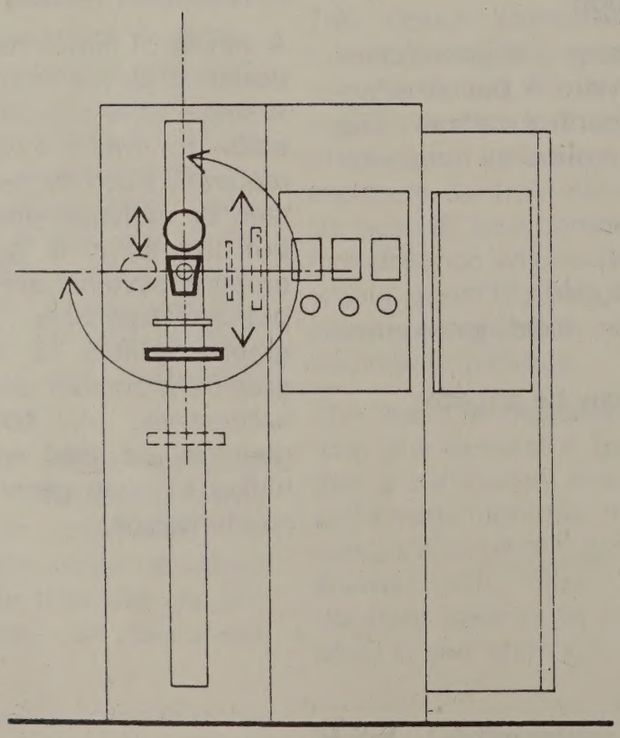

Option Mam B – Integrated generator and stand, limited movements (paragraph 14.3)
Option Mam C – As above but with more extensive movements (paragraph 14.4)

15 Paediatric X-ray equipment (Paed)

15.1 Introduction

In the design of a radiodiagnostic department the special needs of neonates and children should not be forgotten. The recommendations of the Court Committee 'Fit for the Future', The Report of the Committee on Child Health Services, December 1976 emphasises these needs in general and recommends a specially equipped radiodiagnostic examination room or rooms in district hospitals.

In any radiodiagnostic room a great deal can be achieved with little expense by careful consideration in the selection or adaptation of restraining devices etc and the provision of toys or pictures to capture the attention of small children during setting up and exposure. However where the number of examinations of neonates and children is significant, equipment specially designed for such examinations will become justified. This chapter deals with such purpose designed apparatus.

15.2 Option Paed A – Paediatric chest unit

15.2.1 General comments

This Option comprises an assembly for chest radiography of neonates or young children. It consists basically of a cassette stand dimensioned to suit children and incorporating a variable height chair. The cassette stand itself together perhaps with other protective devices or barriers is specially designed to allow an adult to support a child or neonate without receiving an unacceptable radiation dose. Special positioning and restraining devices may be available for neonates.

15.2.2 Composition of Option

One or more of the following devices:
- assembly/cassette stand
- barriers and/or devices to protect adults supporting patient
- patient positioning and restraining accessories

15.3 Option Paed B – Paediatric fluoroscopic table usable for all adults

15.3.1. General comments

This Option comprises a type of fluoroscopic table fully suited to adult examinations but specially designed to accept a range of positioning and restraining devices and cradles for neonates and young children (up to about 6 years of age). Paediatric accessories might comprise a C-arm attachable to a special footrest and designed to accept, between its ends, a neonate cradle or a cradle for children or a micturation support. Height of the C-arm above the table-top will be adjustable and motorised and rotation of patient cradles in two planes allows the patient to be viewed from any aspect.

The image intensifier should be of a high resolution type and provision of a 100mm (or equivalent) camera will often be justified.

Fluoroscopic tables encompassed by this Option will be more expensive than an equivalent 'adult' version because of the cost of the facilities to accept cradles and the cost of the cradles themselves. However the extra expense will be justified where there are a significant number of examinations of neonates and young children and, because of the ability to examine adults, will be far more readily justifiable than the following totally dedicated Option Paed C.

15.3.2 Composition of Option

- fluoroscopic table designed to accept a range of cradles but otherwise identical with an 'adult' fluoroscopic table with 0 to 90° tilt: an adverse tilt will depend on the model but may be 90°
- C-arm (or equivalent) to accept cradles
- cradles for neonates
- cradle for young children
- image intensifier
- CCTV system
- small TV monitor

Optional extras:
- 100mm (or equivalent) camera
- videotape recorder

15.4 Option Paed C – Paediatric fluoroscopic table not usable for all adults

15.4.1 General comments

This Option comprises fluoroscopic tables dedicated to the examination of neonates and children. They normally have integrated over-table tubes facilitating remote control. A range of interchangeable cradles will be available for various size children in a manner allowing motorised cradle rotation. The table tilt will be 0 – 90°: adverse tilt will depend on the model but may be 90°. The table-top may be rotatable in planes other than the normal tilting plane. The combination of table and

cradle movements will be such as to allow a patient to be examined in virtually any projection.

Tomography may be facilitated. The image intensifier should be a high resolution type and provision of a 100mm (or equivalent) camera will often be justified.

The tables will be restricted in the size of patient that can be examined. The maximum patient height will depend on the equipment model but will usually be in the range 130 to 170cm. Since a full range of adult heights will not be accommodated, such dedicated fluoroscopic tables will be chosen only where there is a very high workload of neonate and children examinations.

15.4.2 Composition of Option

- integrated-tube, fluoroscopic table designed to accept a range of cradles, tilt 0–90°: adverse tilt will depend on model but may be 90°. Table rotation in other planes may be a design feature
- accommodation for limited range of patient heights (in range 130 to 170cm) not including full range of adult heights
- usually remote control
- tomography may be a design feature
- range of cradles for neonates and children
- under-table image intensifier
- CCTV system
- small TV monitor

Optional extras:
- 100mm (or equivalent) camera
- videotape recorder

15.5 Over-table and under-table image intensifiers

Fluoroscopic tables designed for paediatric work are available either with an under-table or over-table image intensifier/serial changer. The former will be of the integrated-tube type allowing remote control and their general advantages and disadvantages are discussed in paragraph 10.5.1. Such tables have added advantages in paediatric work. A child is far more 'accessible' to a radiologist and this is particularly so with neonates and small infants who would be virtually hidden under an over-table image intensifier/serial changer assembly. Additionally, and most important, the claustrophobic and frightening experience of the proximity of an over-table image intensifier/serial changer is avoided if the assembly is under the table. However, since it is often necessary for a radiologist or radiographer to stand close to the patient the potential of remote control to save staff radiation dosage may not be realised.

16 Accident and emergency patient transfer systems (A&E)

16.1 Introduction

An A&E Room will usually function as part of the main radiodiagnostic department (see Health Building Note Number 6) and may share the film-processing facilities with other radiodiagnostic rooms. Its workload will normally consist of emergency cases. (See paragraph 25.6 for further equipment recommendations for A and E work).

A number of A&E patient transfer systems are available, purpose-designed to enable radiographic and fluoroscopic procedures to be carried out with the minimum of physical disturbance to the patients from the time he/she is placed on a stretcher at the scene of the accident. The choice of A&E trolleys should involve all those disciplines concerned in their use since their use will not be restricted to radiological work and the type chosen will need to suit the policy of the hospital as a whole.

16.2 Option A&E (A) – Trolleys with fixed tops

16.2.1 General comments

This Option comprises a number of purpose-designed patient transfer trolleys on which the

patient and stretcher is placed, on arrival at the hospital. The trolleys are designed to facilitate examinations in the A&E Room without having to remove the patient from the trolley.

16.2.2 Composition of Option

Patient transfer trolleys which may incorporate a number of the following features:
- up to 15° tilt at either end
- variable height
- top with low radiation absorption
- special mattress
- back rest
- arm support
- side supports
- support for drip bottle
- receptacle for patient's belongings
- holder for oxygen bottle

In addition the following:
- a mobile cassette storage box with cassette tray assembly accepting a 35 × 43cm cassette and incorporating a stationary grid
- a cassette tray adapter for 24 × 30cm cassettes
- a tube-mounted optical device for aligning the X-ray beam to the cassette

16.3 Option A&E (B) – Trolleys with removable tops

16.3.1 General comments

This Option comprises a patient transfer trolley system where the trolleys consist of mobile base-frames with removable tops and rigid mattresses which can be used as stretchers. At the scene of an accident, a patient can be placed on the rigid mattress and then transferred on to a trolley base on arrival at the hospital. The trolleys and mattresses are designed to facilitate radiographic examinations in the A&E Room without having to move the patient from the mattress.

The system is generally more versatile than Option A&E (A) in that:
- a patient can be transferred on the mattress to a radiographic table or theatre operating table if required
- it may have better facilities to support the patient in either the recumbent or sitting position (as a chair)

The extra expense will be justified only where full use will be made of these extra facilities. Versatility will be further increased if this type of trolley is used with an appropriately designed radiographic table. (See paragraph 16.4 below)

16.3.2 Composition of Option

Patient trolleys which may incorporate the same features as Option A&E (A) but with
- removable tops for patient transfer with side rails for accessories
- rigid mattresses usable as stretchers (with disposable covers)
- compression bands
- lateral cassette holder

16.4 Radiographic tables for A&E work

In a radiodiagnostic room designed primarily for A&E work a radiographic table of type RT A or RT B will be satisfactory. However, it may be preferable to install a table which is designed to be more suitable for A&E work. Such tables will usually comprise a floating radiographic table top supported on two pillars with motorised tilting for 'head up' or 'head down' positions. The design may allow interchange of a range of table tops.

Trolleys of type A&E (B) may be specifically designed to allow mattresses to be slid easily from the trolley onto the above type of radiographic table. Furthermore the trolley base may be designed to support and facilitate the exchange of the range of radiographic table tops which the above radiographic table is designed to accept. Trolleys of type A&E (B) may also accept a rigid patient transport top which can easily be transferred from the trolley onto the base of some operating tables.

Thus trolleys of type A&E (B) together with compatible radiographic tables (and, where appropriate, operating tables) can provide a very versatile hospital patient transfer system for A&E work.

Accident and emergency patient transfer systems (A&E)

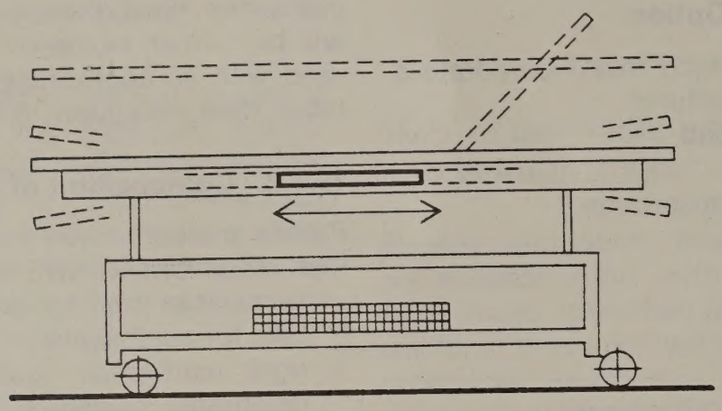

Options A&E (A) – Trolley with fixed top (paragraph 16.2)

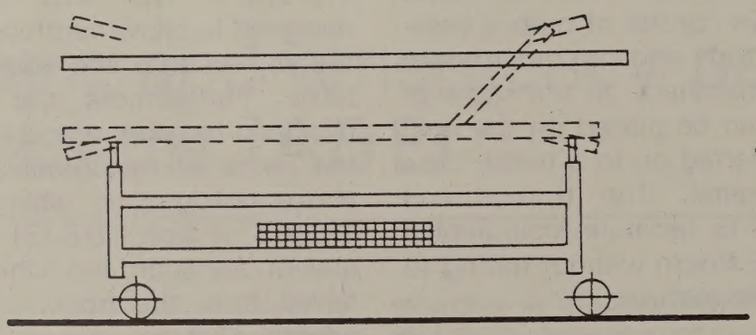

Option A&E (B) – Trolley with removable top (paragraph 16.3)

17 Mobile and portable X-ray equipment (Mob)

17.1 Mobile X-ray units (excluding mobile image intensifiers see Chapter 18)

17.1.1 General comments

Mobile X-ray units (not to be confused with portable units, see paragraph 17.2) can be broadly classified into three groups dependent on whether the electrical energy for an exposure is drawn directly from the mains, from a built-in battery or from capacitors charged from the mains prior to an exposure. The following Options are not, as with other Chapters, listed in order of increasing sophistication and price. Choice of type of mobile will be determined mainly by local circumstances and preferences for particular modes of operation.

17.1.2 Option Mob A – 'Conventional' mains supplied mobiles

Mobiles drawing their 'exposure energy' direct from the mains employ a 2-pulse (single phase) generator with the X-ray tube, tube support and control console mounted on a mobile chassis which may be motor driven from a battery supply. These are the more 'conventional' type. Output power varies from 8kW to 18kW with up to 125kV and 300mA maximum. The X-ray tube and high voltage transformer may be incorporated in the tube head. Equipment with the larger outputs may impose a maximum instantaneous load on the mains of about 35kVA and require a stand-by continuous load of about 0.5kVA. Normally even the most powerful mobiles can be satisfactorily operated on a good 13 amp ring circuit but it must be noted that the impedance must not exceed 0.32 ohms at 240 volts and normally a special un-fused 'Red Plug' will be required. Maximum weight is not likely to exceed 410kg. Mobiles in this category are by far the most widely used.

17.1.3 Option Mob B – Mobiles with battery generated power

Mobiles which draw their 'exposure energy' direct from an in-built battery generate the high voltage supply for the X-ray tube from a battery powered inverter circuit and thereby do not require to be connected to the mains supply during use. This eliminates problems of long trailing mains cables and allows unrestricted use where a mains supply is poor, inaccessible or absent. The method of generating the X-ray tube voltage leads to an almost constant potential which has some radiographic advantages. However with the most equipment output power is lower than that available with more powerful 'conventional' machines, being within the range 55 to 125kV and 1 to 300mAs where the tube current may be fixed at 100mA for all exposures. 'Two-knob' control of radiographic factors is usual. The cost of battery replacement may be very high with those mobiles employing nickel/cadmium cells but they may have a life warranty of about 5 years. Mobiles of this type which have proved the most reliable and satisfactory in use tend to be the most expensive.

17.1.4 Option Mob C – Capacitor discharge mobiles

Capacitor discharge mobiles utilise a rapid discharge of energy into the X-ray tube from a high voltage capacitor which is recharged between exposures from a mains-driven power supply. The maximum current drawn from the mains is small (typically 5A): the supply cable is light and there is no requirement for a special mains plug for 13A sockets. Machines of this type can cover most requirements for mobile radiography at least as effectively as conventional mobiles and are particularly well suited to examinations requiring moderate energy to be delivered in a short time (eg this type of mobile might be the ideal choice where the demand is for ward chest radiography). However a conventional 300mA mobile will usually be better for radiography of the thickest patient cross sections eg lateral lumbar spine because of the limit on the energy available from the capacitor and the manner in which it is delivered in capacitor discharge equipment.

17.1.5 Factors to consider when choosing a mobile

In choosing a mobile, care should be taken to ensure that its dimensions allow passage through all doors leading to areas where it is to be used. Also the weight of a machine may be critical with respect to lifts. The latter must not only be capable of carrying the weight but also must stop level with the landing floor when loaded with the mobile and passengers. The height of the X-ray tube support column and the range of the tube movements will need to be considered for orthopaedic applications.

Before purchasing a mobile of the non-conventional type careful consideration should be given to the nature of the work to be undertaken.

17.2 Portable X-ray units

A portable X-ray unit is one designed to be transported as a number of sub-units to be assembled at the site of use. Although trolley or stand with castors may be provided, this facility is for positioning only. Portable units should never be purchased for use in areas accessible to 'mobile' machines (see paragraph 17.1) since power output, stability and mechanical strength will be unacceptable for such work and can lead to hazards in use. With this in mind, units should be selected that are truly transportable – a number of models are available which are generally too heavy and cumbersome to meet this criterion. Units are typically 1.5 to 2.0kW, 20mA, 80kV with weights from 23Kg to 76Kg.

18 Mobile image intensifier equipment (Mob I)

18.1 Introduction

Equipments in this category are most commonly used in surgical radiology (ie operating theatre and Plaster Room) as well as being frequently used in Intensive Care and Casualty Units. They may additionally be required for applications such as implantation of radioactive sources, insertion of pacemakers, sondes, catheters and electrodes, orthopaedic surgery and urology, locaton of endoscopes. For these applications image storage devices may be very useful. (See paragraph 23.6)

Most of the units in the range are of the 'single-plane' type using a C-arm construction with the X-ray tube at one extremity and an image intensifier tube at the other. A number of systems offer radiographic as well as fluoroscopic facilities.

18.2 Option Mob I (A) – Units for fluoroscopy only (cardiological applications)

18.2.1 General comments

Equipment within this Option comprise a tubehead (X-ray tube and high voltage transformer) combined with a single field 15cm or 23cm image intensifier/TV camera mounted on a vertical column – the whole assembly being on a mobile base (usually non-motorised). They are designed for fluoroscopic procedures only and tend to be used largely for coronary intensive care work, eg cardiac pacemaker insertion – they are particularly suited to bedside usage.

18.2.2 Composition of Option

- tubehead/intensifier linked assembly on a mobile base with adjustable focus to intensifier distance complete with generator and controls
- mobile control console, with TV monitor and fluoroscopic and TV controls
- facility for fluoroscopy only

18.3 Option Mob I (B) – Units for both fluoroscopy and radiography

18.3.1 General comments

Equipment within this Option generally employ an adjustable C-arm construction, on a mobile (usually non-motorised) base, and tend to be much more versatile as regards techniques than those described in Option Mob I (A), and in particular facilitate radiography as well as fluoroscopy. The more expensive units can be used for all the applications listed in the Introduction. The cheaper units tend to employ an image intensifier not larger than 15cm diameter – the more expensive units might employ a larger intensifier up to 23cm diameter.

18.3.2 Composition of Option

- mobile base with C-arm carrying X-ray tube and image intensifier complete with generator and controls
- TV monitor on a mobile trolley
- set of diaphragms
- radiographic grid

– sterile covers
– facility for fluoroscopy and radiography

18.4 Option Mob I (C) – Bi-plane units

18.4.1 General comments

Equipments within this Option are purpose designed for fracture surgery and comprise two individual X-ray tube/image intensifier/CCTV systems mounted on a mobile ring stand. A single TV monitor on a mobile stand is normally used for image display. The ability to rotate the tube/intensifier systems around a patient located centrally within the ring allows 'multiplane' viewing. Claimed advantages are better working space around the patient and reduced operating time for many surgical procedures. Equipment is, however, very expensive.

18.4.2 Composition of Option

– ring-stand assembly on castors complete with two X-ray tubes, image intensifiers and TV cameras;
– control panel with controls for each viewing plane (radiographic and fluoroscopic), small TV monitor; generator and controls;
– TV monitor on mobile stand;
– foot-operated switch to expose and to change viewing planes.

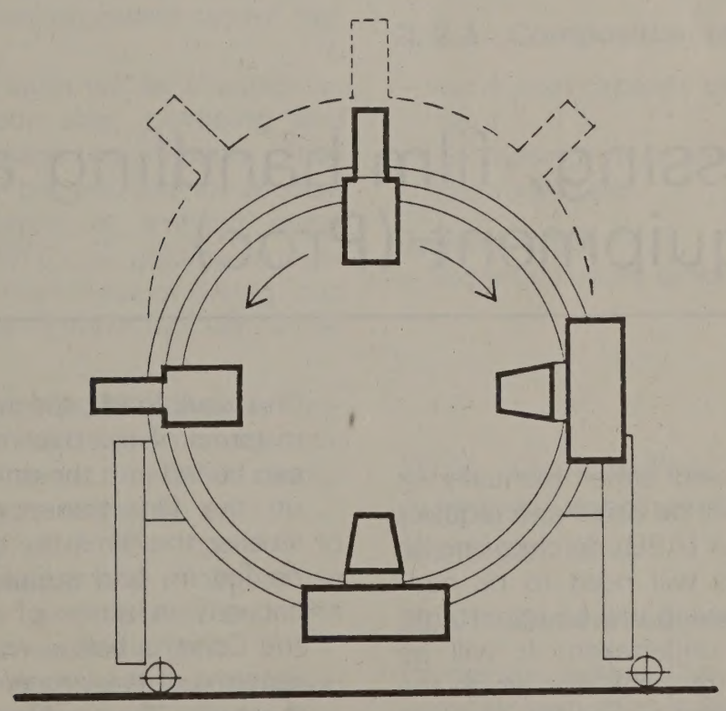

Option Mob I (C) – Bi-plane units (paragraph 18.4)

19 X-ray tube-supports (TS)

19.1 Introduction

An X-ray tube-support will either be of a floor-to-ceiling or ceiling mounted type. The type chosen will depend on the radiological application and room design. Care should be taken to ensure that the range of all movements of the tube is sufficient for the techniques envisaged and that, for ceiling mountings, the tube can be lowered sufficiently for the most exacting technique envisaged and yet can be retracted to give a safe head clearance. Where any room has a clear floor to finished ceiling height substantially different from the recommended 3.1 metres, difficulties can arise unless tube-supports are carefully specified. Tube-supports will have a maximum weight rating dependent on their general structure and counter-balancing system: tubes exceeding such weights must not be attached. Due consideration should also be given to loading stresses on ceilings and floors.

19.2 Option TS A – Floor/ceiling type

19.2.1 Composition of Option

The Option comprises a vertical column with a counterpoised cross-arm for the tube carriage and mounting. The tube will be rotatable about its long and short axes and around the vertical column. The latter may be either static or movable on floor track/tracks (the single floor track version usually requiring a wall or ceiling rail for stability). Design normally allows a spring or motorised attachment for tomography.

19.3 Option TS B – Ceiling mounted type

19.3.1 Composition of Option

The Option comprises a vertical tube column either of telescopic or articulated sections mounted on a carriage assembly which runs on ceiling tracks either longitudinally, laterally or both. The vertical movement may be counterpoised or motorised. The longitudinal/lateral movement may also be motorised.

20 Processing, film handling and viewing equipment (Proc)

20.1 Introduction

X-ray film can be processed either manually or automatically. The latter will be usual and requires an automatic processor unit (APU). In choosing an APU a number of factors will need to be considered, of which the following will be important:

- the work-load to be undertaken. It will be necessary to ascertain the *peak rate* which the processor will be expected to handle. This will depend on the organisation and the nature of the work of a radiodiagnostic department, the extent to which peaks can be smoothed and the extent of queueing which may be tolerable, particularly during the busiest periods of a day. It will also depend on the availability of other APUs.

  The work-load capacity of an APU is expressed in terms of the maximum number of films that can be fed into the unit per hour – it will depend on the film transport speed. Obviously the smaller the films the greater the rate they may be fed in, and suppliers frequently quote the capacity in terms of mixed sizes. However in the Options below work-load capacity is given in terms of the largest film the APU can handle, ie usually 35cm × 43cm.
- the type and range of film sizes to be processed. Particular consideration will be necessary if small films eg 35mm or 100mm are to be processed.
- processing cycle time. This is usually expressed as the elapsed time from the leading edge emerging from the processor and is thus inde-

pendent of film size. However the time taken for a processor to deliver a dry film from the time it is presented at the input will be the processing cycle time plus the time taken for the film to enter the APU. The latter depends on the film transport speed and is often expressed as the loading time per film: it will be an important factor where it is necessary to be able to feed in a number of films in quick succession, eg work from rapid film-changers.
In general the higher the work-load capacity the higher the transport speed and therefore the shorter the loading time.
The higher the film transport speed the greater capacity of processing tanks is required for a given cycle time.
facility to select processing cycle time. With some APUs the processing cycle can be selected from a range usually extending from fast, eg 90 seconds to slow, eg 4 minutes. This facility may be useful where a range of films requiring slower processing times are handled in a department, eg some mammographic and non-screen orthopaedic films. Whereas it will be unusual regularly to change the processing cycle time once a processor is installed, it may be convenient to be able to do so occasionally, eg to change a processor normally used for slow processing to fast processing in the event of breakdown of another processor set for fast cycle.

- installation costs. The latter will be affected by, for example, processor size, plumbing and water supply and drainage requirements. Thus no mixing valves may be required for processors specified to operate at ambient water temperatures (30° to 40° C), air ducting requirements will depend on the means of drying, and heat and fumes generated will affect ventilation requirements.
- running costs, eg water, electrical power, consumption of chemicals. APUs vary considerably in these respects and some may offer special design aspects relating to economy, eg
  a. fully automatic stand-by control to ensure processor operates with minimum use of both electricity and water and the minimum mechanical wear and tear;
  b. automatic limiting of water consumption to the quantity required to wash a single film;
  c. infra-red drying (lower running costs and fewer problems of heat dissipation)
- These features, together with a low-operating noise level should be considered as having merit in selecting an APU
- cold water input. Some processors do not require supply of hot water if they have the facility to heat an incoming cold water supply. This may be of advantage particularly where the central hot water supply is unreliable.

20.2 Option Proc A – General purpose, low capacity 40 – 85 films per hour

20.2.1 General comments

Processors within this Option have a relatively low work-load capacity but will be suitable for work-loads of between 25 to 50 films per day (mixed sizes) arriving at a steady rate. They generally have a relatively long loading time which may make them unsuitable in circumstances where it is often required to feed in a number of films, eg 4 to 6 mixed sizes, in rapid succession. They may be chosen for serving a theatre suite, particularly if part of a daylight loading and unloading system. Quick delivery of a dry film may be a great advantage over manual processing in these circumstances.

Some processors in this Option can be table-top or trolley-mounted.

20.2.2 Composition of Option

- work load capacity between 40 and 85 films per hour
- processing cycle time fixed in the range of 90 sec to 240 sec

Optional extra:
- external supply tanks for fixer and developer

20.3 Option Proc B – General purpose, medium capacity up to 180 films per hour

20.3.1 General comments

Processors within this Option have a work-load capacity such as to make them the choice for most radiodiagnostic departments. They will be chosen for processing not less than 50 films per day.

20.3.2 Composition of Option

- work-load 120 to 180 films per hour
- processing cycle time selectable, eg fast 90 sec to slow 3½ min.

20.4 Option Proc C – General purpose, large capacity up to 250 films per hour

20.4.1 General comments

Processors within this Option have the highest work-load capacity. Their high transport speed will provide for very high peaks in work-load where a large number of films need to be entered into the processor in rapid succession. They will be chosen therefore only where such high peaks in work-load prevail routinely, eg where a high output from rapid film-changers are regularly superimposed on a heavy steady flow.

20.4.2 Composition of Option

- work-load capacity 200 to 250 films per hour
- processing cycle time selectable, eg fast 90 sec to slow 3½ min
- roll film feed and take-up

20.5 Option Proc D – Dedicated dental film processor

Dental films can of course be processed manually, but where manual processing facilities are not available or where work-load is reasonable, an automatic dental processor will be required. Dental processors are basically of two types, ie:

A – those which can process only the small films used for intra-oral and occlusal work

B – those which can process, in addition, the larger pan-oral films. These will also be capable of accepting other larger films with a maximum dimension up to 15 or even 25cm.

A processor of type A will usually be chosen except where a pan-tomographic unit is installed for pan-oral techniques or where intra-oral and occlusal work-load is very high. A processor of type B will be chosen where a pan-tomographic unit is installed. It may also be required where dental work-load is very high, eg 100 patients per day or more because processors of this type tend to allow small films to be fed in rapidly and thus eliminate queueing. A semi-manual processor may be chosen where work-load is very small.

Many dental processors are available in two models, ie those which deliver wet films and those which deliver films dry. Dry delivery is highly preferable. Most processors will also offer a daylight loading system. The latter is desirable and will be necessary in departments with daylight systems for other X-ray diagnostic work.

20.6 Option Proc E – Small-film and cine film processors

Where the 100mm (or equivalent) and/or cine work-load is not substantial, both types of film can be processed using many but not all conventional 'large-film' automatic processors. However where the work-load of either or both is high an automatic processor designed specifically for small-film and/or cine film will be justified.

Some processors will process only 16mm and 35mm cine film and others only 100mm cut-film. However processors are available which will process both types eg 16, 35, 70, 100 and 105mm roll-film and 100mm cut-film. Daylight processing will be usual although it may be necessary to load the feed-in magazine in a safe lit area/dark room (this will be the case for cine film).

20.7 Daylight film handling systems for cassette radiography

Most new radiodiagnostic departments will include some daylight handling and processing, and many will handle all standard films using the daylight principle. At least one 'safe-lit' area/darkroom will be required for handling and processing special film types, eg non-screen film, roll film, pantomographic film. Such a 'safe-lit' area/darkroom will also be required for those daylight handling systems which require the loading in a 'safe-lit' area of the 'film-store' magazines for daylight dispensers/unloaders.

Daylight handling systems will be based on either conventionally-opening, hinged type cassettes or 'non-opening', non-hinged cassettes where a film is introduced through a light-tight slot. The latter have the advantage of protecting the screen from dust, dirt and physical contact but at present require special film, eg notched. Hinged cassette systems have the advantage of accepting all standard screen-film.

A daylight film handling system will comprise cassettes as above, facility for cassette loading and unloading, processor(s) appropriately adapted and possibly unloading 'film-hold' transport box(es). Some systems are based on having unit(s) for loading separate from the unit for unloading film whereas others combine the two operations in a single load/unload device. Whichever system is chosen there must be a capability for handling an appropriate range of film sizes.

It is important to distinguish between those systems which separate the means of loading from

that for unloading and those which combine the loading and unloading in a single unit. With the former the unloading device is attached to a processor and the device(s) for loading, although usually installed close to the processor, can in principle be located anywhere. The means for loading might comprise for example either a number of separate wall-mounted loaders, one for each film size, a single assembly with a number of cassette entry slots, one for each film size, or a single assembly with a single cassette entry slot and a mechanism for identifying the cassette size and thus loading the appropriate film size (from one of a number of film storage cassettes within the assembly). Systems which combine loading and unloading in a single assembly attached to a processor contain a number of film storage magazines (one for each film size) and sense the size of the cassette in order to load the appropriate size film. Before the loading the system obviously first unloads the exposed film from a cassette and transfers it to the processor.

Systems which separate loading and unloading will usually be substantially cheaper and less complex than those which combine the two stages. This cost difference is important in view of the fact that the recommendations in the schedules of Chapter 26 (see 26.3.24 and 26.3.25) are based on the use of a daylight system. Furthermore the number of processors recommended for radiodiagnostic departments of various sizes are more generous than in previous equipment notes and approximately amount to one processor per two radiodiagnostic rooms (see 26.3.26). The Equipment Cost Allowance Guide is based on each of these processors being associated with a daylight system for loading and unloading. However if the daylight system for each of these processors comprised a combined load/unload system the costs could be excessive. Thus the Equipment Cost Allowance Guide will allow for the provision of a system with separate load/unload assemblies. If a combined load/unload system is preferred in a radiodiagnostic department either a case will need to be made to justify any extra expenditure which might arise or the number of processing stations will need to be reduced.

It should be noted that not all departments will wish to install daylight systems and a number may wish to install such systems in association with some radiodiagnostic rooms but not all. Since the Equipment Cost Allowance Guide allows for a complete daylight scheme it obviously does not preclude a choice of non-daylight operation.

It should be recognised that not all processors can be adapted to daylight systems and thus it is advisable to check with the suppliers of the daylight film handling system as to the makes of processor which are compatible.

The above deals with cassette radiography. There are daylight film handling systems designed to eliminate cassettes, ie they basically provide a magazine of films which are transported to an expose position between screens and after exposure the films are transferred automatically direct to a dedicated processor or to a 'film-store' transport box. Examples are automated cassetteless chest units (Option Ch F paragraph 9.7), magazine loading for some types of fluoroscopic table (see paragraph 10.8) and some types of radiographic table (see paragraph 7.5).

20.8 Automatic chemical mixers

Radiographic quality relies heavily on correct dilution of chemical concentrates and thorough mixing of processing solutions. Until the introduction of automatic mixers, solutions were diluted and mixed manually and often contained in large solution replenishment tanks connected to the processor. The danger of incorrect dilution or inadequate mixing with this arrangement is ever present and moreover is associated with unpleasant fumes. 'Open' mixing of photographic chemicals in working areas, particularly in a darkroom, is strongly deprecated. The advent of daylight film handling systems with processors often located in 'public' areas and radiodiagnostic rooms has made manual mixing and 'opening' tanks even less desirable.

An automatic mixer consists of a single unit comprising three sections, ie one in which the developer concentrate is automatically diluted and mixed, another similar section for the fixer and a section acting as the replenisher storage tank. Automatic mixers are suitable for connection to a processor of the pumped replenisher type. The developer and fixer concentrates are supplied in plastic containers designed to fit onto and empty into the mixer without the need for opening. Exposure of staff to fumes and corrosive fluids is thus eliminated and an inherently clean procedure is ensured.

Automatic mixers are recommended and are particularly desirable where daylight film handling and processing systems are installed. In general one mixer can serve up to two processors provided they are located in generally the same locality (in some circumstances more than two may be served).

20.9 Central chemical supply

Central chemical supply comprises a system in which all developer and fixer solutions for the whole of a department are prepared and mixed in one area and stored in large containers from which they are piped to the department's processors. Mixtures may be pumped or gravity fed, with the latter being generally more reliable. Such systems have the attraction of economy of space and avoidance of handling chemicals in any but a single specially reserved location. They have the disadvantages that a single error in dilution or mixing or a breakdown in the central area, would affect all the processors which are served.

The advent of automatic mixtures (see para 20.8 above) has reduced the attractions of central chemical supply.

20.10 Silver recovery

Recovery of silver from fixer solutions should be undertaken in all radiodiagnostic departments. Three methods of recovery are available, ie electrolytic units, metal replacement bins and collection of used fixed solutions. With the latter no equipment needs to be purchased, used fixer is collected and stored and sold at a price per litre determined from sample tests performed, on site, in the vendor's presence. The higher the silver concentration in the fixer, the more profitable is this arrangement since a fixed service charge related to unit volume is usually made. Its major disadvantage is that regeneration and re-use of the fixer solution is obviously impossible. A good system for storage and regular collection is necessary.

Because of the capital outlay electrolytic units will be preferred only where the daily fixer consumption is reasonably high, eg exceeding 20 litres. Their advantages are that they yield high purity silver, are reasonably clean and fixer re-circulating facilities can be incorporated. The latter could halve fixer costs to a department. However they are relatively expensive, efficiency and reliability falls rapidly if they are not regularly serviced, time is expended stripping the cathode and some form of security is required for the silver flake. Arrangements can be made to have units installed and serviced free of charge for an agreed percentage of the pure silver recovered. One unit could service two automatic processors. However if the processors are remote from one another potentially high plumbing costs and the problems of maintenance to keep hoses free of solid deposits should be kept in mind. They should be installed in well-ventilated areas and not in dark rooms.

Where the daily fixer consumption is below about 20 litres, metal replacement bins may be preferred. They will remove up to 99% of available silver, need no electrical supply and are inexpensive. However, waste treated fixer cannot be re-used.

A District system for silver recovery may be advantageous.

20.11 Film marking

All radiodiagnostic departments will need a number of devices for marking X-ray films with particulars of the patient etc. Markers are available in three general types, ie:

A – self-contained, battery operated flash-type for slot entry cassettes used in daylight film handling systems

B – photographic type for 'window' type cassettes

C – bench-mounted light (actinic) markers which require films to be removed from cassettes and thus are usable only in a dark-room.

Markers of type A are small and portable and, in departments based on a daylight film handling system, one could be allocated to each radiographer on duty.

Markers of type B are relatively bulky and provision of one per radiodiagnostic room will be appropriate.

A marker(s) of type C will be required for each dark-room.

Some markers in addition to marking a film with a patient's identity may expose a film with a sensitive grey scale for quality control.

20.12 Film viewing

In the vicinity of any processor and in all film sorting/viewing/reporting areas there will be a need for one or more film illuminators. The number and location of such illuminators will depend on the design of a radiodiagnostic department but in each radiographic and general fluoroscopic room a double-panel illuminator will be required and in an angiographic room 4 to 6 panels will be required. It is important to realise that these relatively inexpensive and simple units play an extremely important role at the end-part of the diagnostic procedure. They should be selected with care to

ensure robust construction and even and adequate illumination. The fluorescent tubes should be of the same colour rendering – usually North light.

The Health Building Note Number 6 for Radiodiagnostic Departments advises that all departments with four or more radiodiagnostic rooms should be provided with a seminar room/library. In such a room a multi-viewing illuminator may be justified and certainly so in large radiodiagnostic departments and where there is a teaching commitment. Such equipment comprises a large illuminated panel, sufficient to display a large number of films. Additionally there will be one or more carriages onto which films may be attached and arranged so that a carriage with its attached films can be moved into position in front of the illuminated panel. The number of films that can be held in such a system varies and the larger sophisticated versions are expensive. The capacity required will depend on the size of the radiodiagnostic department and the extent of any teaching commitment.

Where techniques involving 100mm (or equivalent) film are undertaken magnifying viewing facilities will be required. Equipment available varies from simple apparatus incorporating just a magnifying glass and illuminated panel, to equipment with a lens system to project an enlarged image onto a screen: the latter may incorporate a carriage to hold several films, any one of which can be moved beneath the lens system for display. The choice of unit will be determined to an extent by the workload but in general it is unwise excessively to restrict costs for a device on which adequate diagnosis is so heavily dependent.

Cine techniques will be undertaken usually only where cardio-angiography is involved and where therefore there will be a large capital investment in X-ray equipment (see paragraph 12.4). Adequate viewing and editing facilities for cine film will be essential. Equipment available varies significantly in sophistication and price. Although justification may be required for the more sophisticated and costly units it is, in general, unwise excessively to restrict costs in view of the fact that the viewing arrangements are very important end-point in diagnosis dealing with film generated from very expensive X-ray equipment.

20.13 X-ray film copying/ miniaturisation

The storage of full-size X-ray films occupies substantial space. Health Building Note No 6 recommendations are based on the storage of current films up to 2 years old in a radiodiagnostic department with older films stored elsewhere in an archive. This arrangement will often prevail in existing departments. The pressure on space in existing departments and the wish to save space in new departments has led to the development of equipment for copying full-size X-ray films to a 35mm or 100mm format. Storage of the latter requires far less space particularly for the 35mm size. Copying is possible in-house by purchasing the necessary equipment or through companies that offer a commercial copying service.

A good 100mm copy can be viewed without the aid of viewing equipment although its small size may be unacceptable to some referring clinicians.

A 35mm copy requires viewing aids which will need to be of high quality if diagnostic information is to be preserved. Such copies will therefore probably be unacceptable for current films but may be well suited to archives.

There has been a tendency to assume that the saving of space and building costs achieved through miniaturisation will offset the costs of copying. Such an assumption should be treated with great caution. It has also been stated that the cost of copying can be funded by the silver recovered from the scrap full-size X-ray films. The latter argument should also be treated with caution since it should be remembered that all full-size X-ray film will in any case at some time become available as scrap and that using monies from recovered silver for film copying represents a lost opportunity for using such monies for other purposes. Copying to a 100mm format is very expensive in copying film alone and it is doubtful whether savings in building costs, staff time etc could ever offset copying costs. Although copying to a 35mm format is far less expensive it may well still be cheaper to store full-size films in most circumstances.

Before embarking on a scheme for miniaturisation an in-depth study of costs is recommended. This should take account of savings in building costs, space maintenance and staff time but should also include the costs of copying equipment, equipment maintenance, copying films and chemicals, staff time for copying and should not overlook the costs of 'envelopes' for the miniatures and the transcription of patient details etc from the full-size to the miniature envelope. It should be noted that buildings depreciate far slower than equipment. Comparing the true costs of full-size films with a miniaturisation scheme is complicated and should therefore involve persons skilled in finance and economics.

Obviously a filing system based on minature film will be attractive to staff in that it will be cleaner and easier to use. However copying in-house can be a tedious task but one where the quality of workmanship must nevertheless be consistently high.

20.14 Rare-earth intensifying screens

The first rare-earth intensifying screens were introduced commercially in about 1974 since when they have been gradually introduced into radiodiagnostic departments. Many of the first commercial screens were unsatisfactory in a number of respects and had a short life. However most if not all of these original deficiencies seemed, at the time of publication of this Note, to have been overcome and if any remain it is assumed will be overcome. In 1980 it was estimated that about 7% of screens in use were rare-earth types and their use was increasing steadily.

The use of rare-earth screens can result in a substantial reduction in patient dose: most users seem to be able to reduce dose to about half that incurred using conventional calcium tungstate ($CaWo_4$) screens. Thus their use should be encouraged subject to satisfactory operational arrangements and acceptability of image quality. Whilst it is recognised that many departments may not wish to use rare-earth screens for every type of examination, the equipment recommendations in the detailed schedules in Chapter 26 are nevertheless based on the exclusive use of rare-earth screens and the Equipment Cost Allowance Guide will be compiled on this basis.

Since rare-earth screens are substantially more expensive than conventional $CaWo_4$ screens the Equipment Cost Allowance Guide based on the former obviously does not preclude the purchase of $CaWo_4$ screens where for operational or clinical reasons these are preferred.

21 Ultrasonic equipment (Ult)

21.1 Introduction

This chapter deals with equipment with application to general diagnosis, obstetrics and cardiology. As noted in paragraph 25.2 this Equipment Note recognises the need for provision of ultrasonic equipment (with a room or rooms devoted to ultrasonic procedures) in radiodiagnostic departments having 4 or more radiodiagnostic rooms. However it is recognised that there may often be a need for ultrasonic equipment also to be located in other departments, particularly obstetrics, regional cardiac centres, regional ophthalmic centres and vascular surgery centres.

Ultrasonic equipment described may include one or all of the following features: A, B, static or real-time, TM or doppler modes.

A-mode provides a one dimensional display of returned echoes from within tissues and from boundaries between tissue types or organs, shown usually as vertical excursions from a horizontal line allowing, for example, the measurement of distances between tissue boundaries in the body.

B-mode provides a two dimensional display, usually grey-scale, allowing visualisation of the disposition and shape of organs or other features in the body.

Real-time mode also provides a two dimensional image but one which is refreshed at a rate between 6 and 60 frames per second allowing movement of organs and other featues to be visualised. T-M (Time-Motion) mode provides a display of the movement of tissues through which a narrow ultrasonic beam passes (eg the structure of the heart) using the A-scan trace to brightness modulate a line across a strip chart recorder. Thus static featues are displayed as a straight line whereas moving structures produce traces which move across the record as a function of time. Although the record is not a two dimensional image of anatomy it provides the basis on which quantitative measurements can be made of features of interest.

The Doppler-mode is based on detecting the Doppler Shift in wavelength between the transmitted ultrasonic beam and a reflected beam returning from a moving 'target' ie heart or blood vessels or the blood itself. This mode provides information on velocity of movements eg of blood pulsation or foetal heart-rate and may form the basis of sophisticated imaging systems.

The Options described below all provide an image, moving or static. The fact that the Options do not include for example equipment of low cost restricted to the 'A' mode used, for example, for detecting brain mid-line shift or doppler equipment used, for example, for foetal heart monitoring, should not detract from any case made for their provision in various locations in a hospital.

It should be noted that obtaining a good ultrasonic image from any equipment is a matter of skill and that therefore properly trained and experienced staff will be necessary if an adequate diagnosis is to be made.

21.2 Option Ult A – Simple, transportable, real-time scanner

21.2.1 General comments

This Option covers simple, real-time, stand-alone equipment based on both mechanical and electrical scanning techniques. It is suitable for use in a preliminary examination, particularly in obstetrics where much of the basic information required may be obtained without recourse to a static B-scanner. In many cases it may obviate the need for further examination using more expensive equipment. The interaction between the user and the images allows a very rapid examination to be carried out. It is also very suitable for examining moving structures. In general, the resolution obtainable is not as good as that from a static B-scanner but the real-time feature tends to compensate for this shortcoming. The real-time image may be 'frozen' at will and a calliper system used to make measurements on the frozen image. Models incorporating the linear array type of transducer are unsuitable for general abdominal work and particularly for cardiological application because of the bulk of the transducer.

This Option is restricted to instruments which are transportable ie may be transported in a car or easily taken to a ward: they may be mounted on a small trolley.

Composition of Option

Transportable real-time scanner having: –
- frame freeze facilities
- omnidirectional caliper facilities
- Polaroid camera
- trolley if necessary

Optional extras
- Recordings of the real-time images may readily be achieved using a video cassette recorder if the basic instrument has a TV output. If not, a small TV camera, mounted in place of the polaroid camera, may be used to produce TV images for the video cassette recorder.
- alpha-numeric keyboard
- area/circumference measuring facility (eg light pen/joystick)

21.3 Option Ult B – Static B-scanner

21.3.1 General comments

This Option comprises basic general purpose equipment suitable for obstetrics and soft tissue studies. It is capable of producing high quality static grey-scale images although the quality may be affected locally by organ movement caused by respiratory or cardiac motion. The transducer is oscillated manually and the grey-scale images are stored in an analogue scan converter (incorporating a storage tube) or preferably in a digital scan converter (which offers better stability) and are displayed on a television monitor.

21.3.2 Composition of Option

- gantry supporting transducer for contact-scan
- control and viewing console
- grey-scale scan converter
- TV monitor
- omnidirectional caliper facilities with display facilities preferably on A and B scan.
- Suitable range of transducers
- Polaroid camera for one of the display screens
- facilities to display A-scan or T-M mode
- keyboard for entering patient data etc onto the display

Optional extras:

Where the use of Polaroid film is or will be extensive (to be assessed locally) the expense of Polaroid film will justify in addition either:

a. A multiformat camera requiring a TV signal input which allows a number of images (commonly 4, 9 or 16) to be recorded on a sheet of 8″ × 10″ film. (NOTE: If a simple fixed format is chosen the equipment is appreciably cheaper than one allowing the operator to choose from a range of formats available in the one equipment), or

b. A motorised camera back which moves a 10″ × 8″ cassette to produce a number of images, (eg 4, 9, 16) on the film. This fits on the Polaroid camera mounting but, depending on the individual B-scanner may obscure controls/displays, or

c. A bromide paper camera in which images are recorded on a roll of bromide paper, part of which is then cut off and transferred in a special cassette to an automatic processor. Models are available using sheet paper and an integral processor.
d. 100mm (or equivalent) camera capable of recording images from the TV monitor.

The use of any of the above approaches necessitates a high degree of confidence on the part of the user in his scanning and recording techniques as the hard copy is not usually available for inspection before the completion of the examination and possibly the departure of the patient.

21.4 Option Ult C – Static B-scanner with real-time imaging facilities

21.4.1 General comments

In order to facilitate finding the organs/scanning planes of interest it is advantageous to carry out a preliminary general scan using a real-time scanner operating in the range 10 – 60 frames per second integrated with the static B-scanner so that common processing/display facilities are used. The real-time images allow a user very quickly to evaluate general anatomy and to follow up this preliminary real-time scan with a high resolution static scan by manual manipulation of the conventional transducer. Such real-time facilities may consist of an electronically scanned linear array or a mechanical system using a single transducer vibrating through an angle, or 3 or 4 transducers mounted on the periphery of a rotating wheel. Using this Option it is generally possible to carry out examinations at a faster rate than is possible using Option Ult B.

In general, equipment within Option Ult B can be converted to Ult C.

21.4.2 Composition of Option

As for Ult B but incorporating an integrated real-time facility.

Optional extras

As for Ult B plus video-cassette recorder or floppy discs.

21.5 Option Ult D – Comprehensive Real-time Scanner

21.5.1 General Comments

This Option comprises equipment which is designed to operate primarily in the real-time mode, ie 6 – 60 images per second, but is also capable of acquiring high resolution static two dimensional images (B-mode). Such images may consist of individual frames from a real-time sequence or may involve a special slow scan facility effectively involving an 'exposure' of up to a second.

The transducer design will depend on the model but may be based on the mechanical movement of a vibrating system ie transducer or mirror vibrating or on a rotating system eg transducers mounted on the periphery of one or more rotating wheels. With these systems the use of a long water path in some models may result in a rather large scanning head which may restrict access in some examinations. Alternatively the transducers may be based on electronic scanning using a phased linear array to provide dynamic focus. Electronic phased array sector scanners may be significantly more expensive than those described above and at present (time of publication) do not provide static images of adequate quality to meet the requirements of Option Ult D. They are thus not included in this Option (however see paragraph 21.7).

Equipment in this Option will provide comprehensive image processing facilities, via a digital scan converter, and comprehensive display facilities including display of system operating parameters and also a high quality T-M mode. It will also provide a standard TV output for coupling to auxiliary monitors on a multi-imager recording system.

21.5.2 Composition of Option

Real-time scanner offering:
- real-time images at between 6 and 60 frames per second
- versatile image storage, processing and display facilities
- wide range of operator controls
- choice of focal zones
- caliper facilities
- auxiliary TV output
- Polaroid camera
- high quality T-M mode display
- real-time recording facilities eg video cassette recorder or floppy disc

Optional extras:
- multiformat/bromide paper camera as in paragraph 21.3.2.

21.6 Option Ult E – Cardiological A and T-M mode equipment

21.6.1 General comments

This Option comprises equipment facilitating only A and T-M mode and specifically designed for basic cardiological applications. Although it will accept other inputs derived from the patient eg ECG, blood pressure, respiration, only an ECG input will normally be required for equipment in a radiodiagnostic department.

21.6.2 Composition of Option

Console facilitating A and T-M mode only with –
- ECG and phono-cardiographic input and associated electronics
- oscilloscope display and chart recorder for A, T-M mode and ECG and phono-cardiographic trace

Optional extras:
- inputs and electronics for other physiological parameters
- adaptation to provide two dimensional real-time display

21.7 Sophisticated equipment not covered by options

The development of ultrasonic equipment is proceeding rapidly and very sophisticated units are already appearing on the market. More will undoubtedly be offered – tissue differentiation being one area of intense research. Doppler techniques both for imaging and to provide functional information on blood flow are also of increasing interest. In general, new, sophisticated, very expensive units, particularly those offering new diagnostic techniques of unproven value, will be justified in only a few large hospitals, ie usually teaching hospitals or those with a relevant regional specialty.

The development of ultrasonic equipment is so rapid that equipment which may currently be regarded as very expensive and sophisticated will fall in price to allow more widespread application. Electronic phased array sector scanners which have particular application in cardiology fall into this category and it may soon be possible to justify their purchase as alternatives to Option Ult E updated to provide two dimensional imaging, even for application outside regional cardiac centres.

22 Choice of X-ray tube and generator

22.1 Introduction

X-ray tubes will be either fixed or rotating anode types. The former have application primarily to equipments such as dental units and portables often involving a tube-head housing both the X-ray tube and high voltage transformer. With such equipment the X-ray tube will be part of the equipment specification and present a customer with no element of choice and thus such equipment is not discussed further.

Rotating anode tubes are available as standard speed tubes (approaching 3,000rpm) and high speed tubes (approaching 9,000rpm). The latter offer a higher power (kW) rating for a given focal spot size and will be chosen for many new equipment installations. High speed tubes are not necessarily more expensive than standard speed types but there may be a need to provide a high speed stator control unit. However with some generators such a control unit will be either a built-in design feature or included in the basic price (see Chapter 6 paragraph 6.11). The facility to select either standard or high speed may be provided. Furthermore it should be noted that one control unit can be shared between all the tubes powered by a single generator and thus the cost of the control will be spread over the number of tubes involved.

Whether a tube be standard or high speed, the choice of a particular tube will depend on:
- the radiological techniques involved
- the power output and general characteristics of the X-ray generator to which the tube will be connected

The rotating anode X-ray tubes available on the market can be categorised into eight main types (see paragraph 22.2 below). All equipment suppliers will be able to advise on those X-ray tubes suitable for particular radiological techniques and generators

but as a guide this chapter indicates the most usual X-ray tube/generator/radiological technique combinations.

22.2 General classification of rotating anode tubes

Table 1 lists the types of rotating anode tube available in broad categories where the distinguishing feature is basically the focal spot size combinations offered. A further distinguishing feature is the provision of grid control which allows fast exposure switching specifically for cine applications.

22.3 General 'Bucky' radiography and erect/chest radiography

General 'Bucky' radiography will be undertaken using one of the radiographic table Options described in Chapter 7. Chest/Erect radiography will be undertaken using one of the Options described in Chapter 9 often by means of an X-ray tube associated with a radiographic table. Generator Options are described in Chapter 6.

A generator Gen A or C will usually be chosen for use with a radiographic table (RT A, B or C). With such a combination an X-ray tube of type D will be normal.

Chest/Erect radiography using Options Ch A, B or C will often be undertaken using an X-ray tube installed primarily for use with a radiographic table or fluoroscopic table and thus the characteristics of the latter will determine the choice of X-ray tube. Where this is not so, generator Gen C will normally be chosen with an X-ray tube of type D.

Chest/Erect radiography undertaken with an automated cassetteless chest unit (Ch F) or with a 70/100mm Odelca-type camera (Ch E) will usually require a generator Gen C with an X-ray tube of type D.

22.4 Tomography

A large proportion of the tomography undertaken in a radiodiagnostic department will utilise a tomographic attachment for a radiographic table or an integral tube stand on a general radiographic or fluoroscopic table (see Chapter 8 Options Tom A and Tom B and paragraph 8.6). In these circumstances the choice of X-ray tube will be determined primarily by the radiographic and fluoroscopic requirements of the table and associated generator.

Where circular and/or elliptical tomography is to be undertaken using Option Tom C (the less sophisticated type of 'dedicated' tomography unit) a generator Gen C will normally be chosen with an X-ray tube type C. It may be recommended in these circumstances to install an anode-heat/load monitoring facility at least where the work-load is high with little time between patients.

Where circular and/or elliptical plus hypocycloidal and/or spiral tomography is to be undertaken using Option Tom D (the most sophisticated type of 'dedicated' tomographic unit) a generator Gen D will usually be chosen with a special X-ray tube type not given in Table 1. The X-ray tube will be as advised by the supplier of the tomographic unit. It will be generally more expensive than a normal tube because of special requirements on mechanical robustness and cooling. It should be noted that with circular, elliptical and hypocycloidal movements the tube and generator ratings will need to be compatible and the radiographic timer will need to have a maximum setting at least equal to the maximum time of the tomographic movement.

22.5 General fluoroscopy

Fluoroscopic table Options suitable primarily for gastro-intestinal tract examinations and the great majority of 'Bucky' radiography are described in Chapter 10. Generator Options are described in Chapter 6. For fluoroscopic and radiographic applications of the above type (ie general gastro-intestinal) only a limited number of fluoroscopic table plus generator combinations will be appropriate and, for each such combination, only a limited range of X-ray tube types will be appropriate. The X-ray tube chosen will to an extent depend on whether myelography represents a major workload and whether a 100mm spot-film camera (or equivalent) is to be used. Table 2 indicates the generator/X-ray tube combinations which will usually be appropriate taking account of the above factors. Fluoroscopic tables with an under-table X-ray tube will have associated with them an overtable X-ray tube. Choice of the latter will be determined by radiographic factors (see paragraph 22.3).

22.6 General skull radiography and specialised neuroradiology

Chapter 11 describes Options for general skull radiography and specialised neuroradiology. Where a simple attachment to a vertical or universal

'Bucky' stand or radiographic table is to be used for this work (see paragraph 11.2.1) the choice of generator and X-ray tube will be determined by the characteristics of the equipment to which the attachments are to be connected.

Where a skull unit Option Sk A is to be used (basic skull unit with C-arm) a generator Gen C will normally be utilised, often in association with another equipment assembly. A special X-ray tube will be chosen as advised by the supplier of the skull unit and will normally be high speed with a fine focus 0.3mm (30kW) and a broad focus 0.6mm (50kW).

For skull work using Option Sk B (a skull and skeletal tube linked unit) a generator Gen C will usually be required in view of the probable casualty nature of the work with an X-ray tube type B or D.

Options Sk C and D describe equipment dedicated to specialised neuroradiological and pneumoencephalographic examinations ('somersaulting' patient support). With such equipment a generator Gen C will usually be required together with an X-ray tube type B or C.

22.7 Angiography

Angiographic equipment Options are described in Chapter 12 and generator Options in Chapter 6. In general, to achieve maximum contrast it is desirable in angiography to use the lowest kV commensurate with the necessary mAs.

Angiographic equipment Options Ang B, C, D and E include a rapid film changer often either an 'AOT' or a 'Puck'. The maximum exposure time allowable for each exposure will depend on the selected film exposure rate: the following is a useful guide:

With an 'AOT':

6 films per second allows 0.04s maximum
4 films per second allows 0.08s maximum
3 films per second allows 0.10s maximum
1 and 2 films per second allows 0.16s maximum

With a 'Puck'

3 films per second allows 0.12s maximum
2 films per second allows 0.16s maximum

The following advice is based on the use of screens which are not rare-earth (or equivalent). However utilisation of rare-earth screens in the rapid film-changer may allow the use of an X-ray tube with smaller foci or a generator with a lower power (kW) rating.

For peripheral angiography a 50kW, Gen C generator will be adequate. However for abdominal angiography exposures at about 70kW, 600mA, 90kV may be required at a maximum of 3 films per second. Such a requirement implies a generator with at least a 60kW power rating but to allow flexibility in selecting factors (eg low kV high mA) a 70kW generator is preferable. The latter is the upper limit for Option Gen C (and the lower limit for Gen D) and this should be kept in mind particularly for an angiographic/general purpose fluoroscopic table with an integral overcouch tube (Ang C).

Options Ang D and E comprise an assembly of equipment which will be installed in a room dedicated to general angiography. In order to ensure that all contingencies can be accommodated, a generator Gen D will be chosen to provide adequate power.

Options Ang F to H are dedicated to selective coronary and cardio-angiography and involve cine. The latter dictates the need for a generator Gen E. Options Ang F and G additionally include 'simultaneous' bi-plane facilities and thus either one or two generators of type Gen E will be required depending on the generator model (see paragraph 6.12).

Options Ang I and J are dedicated to cranial angiography and include 'simultaneous' bi-plane facilities with rapid film-changers. Power requirements for the generator are not high and thus Option Gen C would be adequate. 'Simultaneous' bi-plane techniques require one or two generators depending on generator model (see paragraph 6.12). In the case of generators within Option Gen C, two such generators will probably be required: alternatively a single generator allowing bi-plane but of a higher power rating could be considered. An X-ray tube with small foci (type A) will be necessary.

Because of the large number of exposures made in a relatively short period of time, rapid film-changer and cine work impose a heavy load on an X-ray tube and a compromise will often be necessary between the desirability of a small focus spot and the need to absorb and dissipate a large heat input at the target. A small focal spot is important in cine applications. High speed tubes will be essential and the more demanding the angiographic work the greater should be the consideration given to employing a tube with a high power (kW) rating with a special target composition eg special tungsten alloy or graphite. An anode-heat/load monitoring facility is advisable.

Table 3 summarises generator/X-ray tube combinations which will be generally appropriate for angiographic equipment Options.

Table 1 Rotating anode tubes: general classification

Type/ Notation	Nominal focal spot size: mm		Typical focal spot power rating (kW)
	Fine	Broad	
A*	0.3	0.6/0.7	High speed, 15kW on fine, 50kW on broad
B*	0.3	1.0 to 1.2	High speed, 12kW on fine, 50kW on broad
C	0.6	1.0	High speed, 25kW on fine, 50kW on broad
D	0.6	1.2/1.3	High speed, 32kW on fine, up to 105kW on broad
Es	1.0	2.0	Standard speed, 20kW on fine, 41kW on broad
Eh	1.0	2.0	High speed, up to 44kW on fine, up to 88kW on broad
F	0.6	1.0	High speed, grid controlled, 40kW on fine, 101kW on broad
G	0.6	1.2/1.3	High speed, grid controlled, 40kW on fine, 101kW on broad

*Some tubes are available with a fine focus of less than 0.3mm and will be chosen only for specialised techniques, eg enlargement radiography.

Library and Information Service
Polytechnic of North London
Holloway Road
London N7 8DB

Table 2 Generator/X-ray tube combinations generally appropriate for fluoroscopic tables chosen for general gastro-intestinal fluoroscopy

Fluoroscopic Table Option	Associated Generator Option	Basic equipment with Image Intensifier	Myelography	Basic equipment plus 100mm (or equivalent) spot film camera†
		X-ray Tube type	X-ray Tube type	X-ray Tube type
Fl A	Gen A	Es	–	–
	Gen C	Es	–	–
Fl B	Gen A	C or D	–	–
	*Gen C	C or D	–	B or C
Fl C	Gen C	C or D	B, C or D	B or C
Fl D	Gen C	C, D or Eh	–	C or D
Fl E	Gen C	C, D or Eh	C or D	C or D
Fl F	Gen C	C or D	C or D	C or D

* Usual choice of generator

† It should be noted that some Gen C generators have a maximum exposure repetition rate of only 2 per second

Table 3 Generator/X-ray tube combinations appropriate to angiographic equipment options

Angiographic equipment option	Associated generator option‡	X-ray tube type
Ang A	Gen C	D
Ang B	*Gen C	D
Ang C	Gen D	D
Ang D	Gen D	D
Ang E	Gen D	D
Ang F	†Gen E	2D or 2G
Ang G	†Gen E	2D or 2G
Ang H	Gen E	D or G
Ang I	†Gen C	A
Ang J	†Gen C	A

*For abdominal angioraphy a 70kW generator may be required which is the upper limit of Gen C and the lower limit of Gen D.
†'Simultaneous' bi-plane work is entailed, therefore one or two generators will be required depending on generator model (see para 6.12).
‡It should be noted that some Gen C generators have a maximum exposure repetition rate of only 2 per second.

Library and Information Service
Polytechnic of North London
Holloway Road
London N7 8DB

23 Choice of image intensifier/CCTV systems and allied equipment

23.1 Introduction

All equipment used for fluoroscopy will require an image intensifier/CCTV system. Direct viewing fluorescent screens are contra-indicated due to their low sensitivity and consequent high patient dose, and due to the problems inherent in dark adaptation.

Image intensifier tubes with Caesium Iodide (Cs I) input phosphors have markedly superior sensitivity and resolution compared with those with Zinc Cadmium Sulphide (ZnCdS) input phosphors. Thus all new equipment should be provided with CsI intensifier tubes.

Choice of image intensifier will depend on the input field size required and whether there is a need to be able to improve resolution through magnification by switching to an alternative smaller input field size. One, two or three output ports will be required. One output will always be used for the TV camera. Whether any further ports are required will depend on whether a 100mm (or equivalent) camera and/or cine camera are to be used. In some circumstances it may be wise to provide a 'spare' port but only where it is envisaged to be likely that a 100mm or cine camera will be needed at a later date. However it should be noted that a number of image intensifiers are provided with two output ports as a standard feature. In some circumstances, eg with U or C-arm assemblies, a three-port intensifier may be preferable even though only two-ports are used, since this will allow camera(s) to be fitted in the least obtrusive positions.

The types of intensifier available are described below in terms only of input field sizes (conversion from cm to inches is only approximate). The minimum number of output ports required for particular radiological applications will be evident from the composition of the Option with which the intensifier is to be associated, eg all cardio-angiography Options (Chapter 12 paragraph 12.4) include a cine camera and thus an image intensifier chosen for such an Option will require at least two output ports. Automatic 'brightness' control (see paragraph 23.4) will be preferable in most circumstances.

23.2 Image intensifier types and their applications

23.2.1 Single input field size about 15cm (6 inch)

Because of their limited input field size, such intensifiers will be chosen only for some specialised types of examination, eg for installations dedicated to selective coronary examinations (Option Ang H), equipment dedicated to cranial angiography (Option Ang J) and some mobile image intensifier units in theatres (Option Mob I(B)). Because of their superior image quality they may be preferred for general angiography (excluding cardiac angiography where the field size would be too small). The small overall size and weight of these intensifiers can also offer advantages in some circumstances. Some intensifiers with a maximum input field of about 17cm are switchable to a second smaller field.

23.2.2 Single input field size about 23cm (9 inch)

A 23cm field size is sufficient for general (gastro-intestinal) fluoroscopy. A single field will be adequate for such procedures except where a 100mm (or equivalent) camera is to be used and then a dual field intensifier (see paragraph 22.2.3) will be desirable.

23.2.3 Dual input sizes, eg about 23cm maximum, switchable to about 15cm (9/6 inch)

Dual-field intensifiers are switchable from a large input of between 23cm and 25cm to a small input field of about 11cm and 17cm with corresponding enlargement of the central part of the image. They will be chosen for most fluoroscopic applications including some surgical radiology. The facility to switch to a small field size will be desirable for the use of a 100mm (or equivalent) camera. Some intensifiers with a maximum field of about 23cm are switchable to two smaller field sizes (ie are triplex).

23.2.4 Intensifiers with large maximum input field size (eg 30cm and above)

Large field image intensifiers, 30cm upwards, have been on the market a relatively short period of time (vis-a-vis publication date) and their development has only recently stabilised. On the periphery of the field they have tended to lack adequate resolution and display relatively high distortion. However intensifiers are now available which claim to overcome these disadvantages. Thus the role of 'large field' intensifiers has not been established, although it can be envisaged that the extra field of view will be of advantage in gastro-intestinal work. In due course, when used with a 100mm (or equivalent) spot-film camera, they might replace serial changers. However, at the present, these intensifiers are expensive and justification would be needed for their provision. Most such intensifiers will be dual or triple-field.

23.3 '625 and 1250 line' TV systems

An image intensifier/TV camera/TV monitor chain will usually provide 625 lines per frame. Systems based on 1,250 lines per frame are available but they are more expensive and would be justified only in rare and special circumstances.

23.4 Automatic 'brightness' control

By automatic 'brightness' control (ABC) is meant circuitry by which the input dose-rate to an intensifier is controlled so that the image brightness of the output phosphor is contained within an acceptable range. This prevents, for example, an image becoming excessively bright when the field of view is moved from a thick to a thin part of a patient. The control thus maintains the input dose-rate to the intensifier at a steady level. The latter may be selectable and there may be an over-ride facility to allow a higher than usual intensifier dose-rate for exceptional situations. Usually the control can be switched to manual operation. The intensifier exposure rate may be maintained through a feedback operating on mA, kV or both. It is worth noting that it is the brightness of the intensifier output phosphor which is 'controlled': the brightness of the image as seen on the TV monitor will obviously also depend on the settings of the monitor and TV camera controls. With a properly set up and maintained system (including the TV monitor and its controls), ABC should ensure that a patient is subjected to no greater dose-rate than is necessary for an acceptable image. Thus patient dose should be significantly lower than with systems controlled manually. However it should be noted that if systems are not well set up and maintained or are incorrectly used, patient-doses could become higher than might have been the case with manual control.

ABC should normally be provided for all fluoroscopic procedures: indeed some suppliers do not offer image intensifier systems without such control.

ABC will also be required for cine applications and will usually be included with cine programming and film density control units.

23.5 Videotape recorders

A videotape recorder allows repeated replay of a fluoroscopic examination. They will be required for special procedures such as cardio-angiography and are desirable for paediatric micturating cystograms. They have an application in most gastro-intestinal work and therefore any reasonable size radio-diagnostic department will require access to a recorder which may be shared between several rooms. They have an obvious teaching role.

23.6 Image storage devices

There are a number of devices available based on principles such as the following

The TV camera output is fed to a videotape or magnetic disc recorder with a limited storage capacity. On command, the device will display on the TV monitor a static image composed of an integration of a preselected number of TV frames. Image quality may be relatively poor but the 'recall and freeze' facility has applications in, for example, surgical procedures such as hip-pinning where diagnostic information is not being sought. Image storage devices of this type when applied to such surgical procedures can significantly reduce patient dosage since they obviate the need for continuous fluoroscopy when a single, sometimes relatively poor but adequate image derived from a few TV frames will provide adequate information.

The above is simply one example of the operation of an image storage device – there are a number of other means for achieving the same end result.

24 Primary radiological functions and primary radiological equipment provision within 2 to 12 room departments

24.1 Introduction

The Health Building Note No 6 (HBN6) gives guidance on a method of calculating the number of radiodiagnostic rooms required to serve a given population on a District basis irrespective of the size and use of such rooms. The size of a department is defined in terms of its number of radio-diagnostic rooms. Rooms for special procedures and ultrasonic examinations are regarded as additional (see paragraph 1.2).

HBN6 guidance on the design of radiodiagnostic rooms is such as generally to ensure that every room is sufficiently flexible in its design characteristics that virtually any equipment for any function can be installed within it. This Chapter indicates the broad types of radiological work seen as appropriate to radiodiagnostic departments of various sizes designed to serve a general population of a size commensurate with the HBN6 formula.

Guidance on the major components of equipment assemblies regarded as appropriate for the recommended radiological functions is given. Equipment assemblies and functions have not been assigned to particular rooms so as to allow maximum flexibility in planning. In general there will be more radiological functions than rooms available since some rooms will have more than one radiological function and more than one equipment assembly installed within them. However Chapter 26 indicates one way of achieving a satisfactory arrangement of recommended functions and equipment within departments of various sizes.

Equipment Options which when combined will provide an assembly appropriate to a particular

function are given. Obviously in some circumstances more than one Option can be identified which would fulfil a requirement and where this is the case a preferred Option is indicated by *underlying* eg Gen *C* or D. The Departmental Equipment Cost Allowance Guide has been compiled on costs of preferred Options.

Some equipment is listed as justifiable only if a case can be made on the grounds of particular clinical services or specialties in a hospital. Such a case would usually be based on factors such as abnormal workloads related to particular techniques for which the basic recommended facilities would be inadequate and unusually high patient referrals requiring particular radiological examinations which the basic recommended facilities are not designed to undertake.

A Dental X-ray unit of type Den A will be located in the dental department of a hospital rather than in the radiodiagnostic department but nevertheless the cost of the unit will be included in the overall Equipment Cost Allowance Guide for the radiodiagnostic department. In this circumstance the provision of a dental unit of this type in the radiodiagnostic department itself will be justified only if a case can be made. However if X-ray equipment of type Den B (pan-tomographic) or Den C (teleradiographic) is justified in a hospital it will be located in the radiodiagnostic department.

Many hospitals have only a single radiodiagnostic room backed by general facilities of varying extent. Such single room arrangements exist usually only in areas remote from larger X-ray departments or to meet particular local demands. Equipment utilisation in these circumstances is usually well below its maximum potential and therefore provision of the more expensive and sophisticated equipment Options will very rarely be justified.

An adequate radiographic facility would comprise a generator Gen *A* or C, a tube and tube support, a radiographic table RTA or *B*, a tomographic attachment Tom A and a 'Bucky' stand Ch B.

If fluoroscopic procedures such as gastro-intestinal examinations were justified then an adequate facility would comprise a generator Gen *A* or C, 2 tubes and one tube support, a fluoroscopic table F1 A and a 'Bucky' stand Ch B. Such an installation should also suffice for general radiographic work.

The extent of other facilities provided eg reception, changing, reporting, viewing will be minimal but heavily dependent on local circumstances. An automatic processor (Proc B) will be usual. Whether daylight film handling is installed will depend on work-load but could be considered where the staffing level is low and the work-load is reasonably high.

24.2 Two room department

24.2.1 Introduction

This department provides for general radiography, tomography and fluoroscopy.

24.2.2 General radiographic facility with tomography

Generator	Gen A or *C*
1 Tube	
1 Tube Support	Ts *B*
Radiographic Table	Rt A or Rt *B*
Tomographic attachment	Tom *A*
'Bucky' Stand	Ch *B* or C

24.2.3 General fluoroscopic facility

Generator	Gen *C*
2 Tubes	
1 Tube Support	Ts *A*
Fluoroscopic Table with intensifier and TV	Fl *A*
Chest Stand	Ch *A*

24.2.4 Dental radiographic facility

Dental X-ray Unit	Den A

24.2.5 Skull radiographic facility (if a case can be made)

Skull Unit	Sk A

24.2.6 Processing (daylight)

1 Automatic Processor	Proc B
1 standby Automatic Processor	Proc A
1 Dental Processor	Proc D
1 Silver Recovery Unit	

24.3 Three room department

24.3.1 Introduction

This differs from a two room department by the addition of a further radiographic facility and extension of the fluoroscopic facility to allow extra sophistication.

24.3.2 First general radiographic facility

Generator	Gen *C*
1 Tube	
1 Table Support	Ts *B*
Radiographic Table	Rt A or Rt *B*
'Bucky' Stand	Ch B or *C*

24.3.3 Second general radiographic facility with tomography

Generator	Gen *C*
1 Tube	
1 Tube Support	Ts *A*
Radiographic Table	Rt *A* or Rt B
Tomographic attachment	Tom *A*
Chest Stand	Ch *A*

24.3.4 Fluoroscopic facility

Generator	Gen *C*
2 Tubes (1 if integrated-tube table and no myelography)	
1 Tube Support (unless integrated-tube table)	Ts *B*
Fluoroscopic Table with intensifier and TV	Fl *B* or Fl D
Chest Stand	Ch *A*

24.3.5 Dental radiographic facility

Dental X-ray Unit	Den A

24.3.6 Skull radiographic facility (if a case can be made)

Skull Unit	Sk A

24.3.7 Processing (daylight)

2 Automatic Processors	2 Proc B
1 Dental Processor	Proc D
1 Silver recovery unit	

24.4 Four room department

24.4.1 Introduction

This differs from a three room department by the addition of a second fluoroscopic facility, recognition of a skull radiographic facility as basic and of peripheral/abdominal angiographic accessories if a case can be made.

24.4.2 First general radiographic facility with tomography

Generator	Gen *C*
1 Tube	
1 Tube Support	Ts *A*
Radiographic Table	Rt *A* or Rt B
Tomographic attachment	Tom *A*
'Bucky' Stand	Ch B or Ch *C*

(Ts *A*, Rt *A* or Rt B, Tom *A*: or *Tom *B*)

*It is important for this facility to allow off-table radiography with a horizontal beam

24.4.3 Second general radiographic facility with tomography

Generator	Gen *C*
1 Tube	
1 Tube Support	Ts *B*
Radiographic Table	Rt A or Rt *B*
Tomographic attachment	Tom *A*
Chest Stand	Ch *A*

24.4.4 Main fluoroscopic facility

Generator	Gen *C*
2 Tubes (1 if integrated-tube table)	
1 Tube Support (unless integrated-tube table)	Ts *B*
Fluoroscopic Table with intensifier and TV*	Fl *B* or Fl *D*

*100mm camera (or equivalent) if justified

24.4.5 Second fluoroscopic facility

Generator	Gen *C*
2 Tubes	
1 Tube Support	Ts *B*
Fluoroscopic Table with intensifier and TV	Fl B
Chest Stand	Ch *A*

24.4.6 Dental radiographic facility

Dental X-ray Unit	Den A

24.4.7 Skull radiographic facility

Skull Unit	Sk A

24.4.8 Peripheral/abdominal angiographic facility (if a case can be made)

Accessories for main fluoroscopic table	Ang A or Ang *B*
Rapid film-changer	
Contrast injector	

24.4.9 Processing (daylight)

2 Automatic Processors	2 Proc B
1 Dental Processor	Proc D
1 Silver Recovery Unit	

Small-film processor Proc E may be necessary if a 100mm is provided (see 24.4.4)

24.5 Five room department

24.5.1 Introduction

This differs from a four room department by adding a facility for intravenous urography which will comprise two radiographic tables, both with tomographic attachments.

24.5.2 First general radiographic facility with tomography

Generator	Gen *C*
1 Tube	
1 Tube Support	Ts *B*
Radiographic Table	Rt B or Rt *C*
Tomographic attachment	Tom *A*
'Bucky' Stand	Ch B or Ch *C*

24.5.3 Tomographic and second general radiographic facility

Generator	Gen *C*
1 Tube	
*Tomographic Unit	Tom *B*
Chest Stand	Ch *A*

*It is important for this facility to allow off-table radiography with a horizontal beam

24.5.4 Two-table intravenous urographic facility

Generator	Gen *C*
2 Tubes	
2 Tube Supports	2 Ts *A*
2 Radiographic Tables	2 Rt A or 2 Rt *B*
2 Tomographic attachments	2 Tom *A*
Chest Stand	Ch *A*

24.5.5 Main fluoroscopic facility

Generator	Gen *C*
2 Tubes (1 if integrated-tube table and no myelography)	
1 Tube Support (unless integrated-tube table)	Ts *B*
Fluoroscopic Table with intensifier and TV*	Fl *B* or Fl *D*

*100mm (or equivalent) camera if justified

24.5.6 Second fluoroscopic facility

Generator	Gen *C*
2 Tubes	
1 Tube Support	Ts *B*
Fluoroscopic Table with intensifier and TV	Fl *B*
Chest Stand	Ch *A*

24.5.7 Dental radiographic facility

Dental X-ray Unit	Den A
Pan-tomographic Unit	Den *B*

24.5.8 Skull radiographic facility

Skull Unit	Sk A

24.5.9 Peripheral/abdominal angiographic facility (if a case can be made)

Accessories for one of the fluoroscopic facilities	Ang *B*
Rapid film-changer	
Contrast injector	

24.5.10 Processing (daylight)

2 Automatic Processors	*2 Proc B
1 Dental Processor	Proc D
2 Silver Recovery Units	

Small film processor Proc E may be necessary if a 100mm camera is provided (see 24.5.5)

*Proc B and Proc C if there is angiography

24.6 Six room department

24.6.1 Introduction

This differs from a five room department by adding an extra general radiographic facility (without tomography) and providing a 90°/90° fluoroscopic table where a case can be made on the basis of myelographic work-load (see Option Fl C, paragraph 10.4). A mammographic unit is also recognised if a case can be made.

24.6.2 First general radiographic facility with tomography

Generator	Gen *C*
1 Tube	
1 Tube Support	Ts *B*
Radiographic Table	Rt B or Rt *C*
Tomographic attachment	Tom *A*
'Bucky' Stand	Ch B or Ch *C*

24.6.3 Second general radiographic facility

Generator	Gen *C*
1 Tube	
1 Tube Support	Ts *B*
Radiographic Table	Rt A or Rt *B*
Chest Stand	Ch *B*

24.6.4 Tomographic and third general radiographic facility

Generator	Gen *C*
1 Tube	
1 Tube Support	Ts *B*
Radiographic Table	Rt *A* or Rt B
Tomographic Unit	Tom B or Tom *C*
Chest Stand	Ch *A*

24.6.5 Two-table intravenous urographic facility

Generator	Gen *C*
2 Tubes	
2 Tube Supports	2 Ts *A*
2 Radiographic Tables	2 Rt A or 2 Rt *B*
2 Tomographic attachments	2 Tom *A*
Chest Stand	Ch *A*

24.6.6 Main fluoroscopic facility (possibly allowing myelography)

Generator	Gen *C*
2 Tubes	
1 Tube Support	Ts *B*
Fluoroscopic Table with intensifier and TV*	Fl *B or* †Fl C Fl *D or* †Fl E

*100mm (or equivalent) camera if justified
†if a case can be made on myelographic work-load

24.6.7 Second fluoroscopic facility

Generator	Gen *C*
2 Tubes	
1 Tube Support	Ts *B*
Fluoroscopic Table with intensifier and TV	Fl *B*
Chest Stand	Ch *A*

24.6.8 Dental radiographic facilities

Dental Unit	Den *A*
Pan-tomographic Unit	Den *B*

24.6.9 Skull radiographic facility

Skull Unit	Sk A

24.6.10 Peripheral/abdominal angiographic facility (if a case can be made)

Accessories for one of the fluoroscopic facilities	Ang *B*
Rapid film-changer	
Contrast injector	

24.6.11 Mammographic facility (if a case can be made)

Mammographic apparatus	Mam A or Mam *B*

24.6.12 Processing (daylight)

3 Automatic Processors	3 Proc B*
1 Dental Processor	Proc D
2 Silver Recovery Units	

Small film processor Proc E may be necessary if a 100mm camera is provided (see 24.6.6)

*If Angiography then 2 Proc B plus a Proc C

24.7 Seven room department

24.7.1 Introduction

This differs from a six room department by the addition of a facility dedicated to chest radiography.

24.7.2 Facility dedicated to chest radiography

Automated cassetteless chest unit Ch *F* complete with tube and generator (Gen *C*) and integral processor (Proc *B*)

24.7.3 First general radiographic facility

Generator	Gen *C*
1 Tube	
1 Tube Support	Ts *B*
Radiographic Table	Rt B or Rt *C*
'Bucky' Stand	Ch B or Ch *C*

24.7.4 Second general radiographic facility

Generator	Gen *C*
1 Tube	
1 Tube Support	Ts *B*
Radiographic Table	Rt *B*
'Bucky' Stand	Ch *B*

24.7.5 Tomographic and third general radiographic facility

Generator	Gen *C*
1 Tube	
1 Tube Support	Ts *B*

1 Radiographic Table	Rt *A* or B
Tomographic Unit	Tom B or Tom *C*
Chest Stand	Ch *A*

24.7.6 Two-table intravenous urographic facility

Generator	Gen *C*
2 Tubes	
2 Tube Supports	2 Ts *A*
2 Radiographic Tables	2 Rt A or 2 Rt *B*
2 Tomographic attachments	2 Tom *A*

24.7.7 Main fluoroscopic facility (possibly allowing myelography)

Generator	Gen *C*
2 Tubes	
1 Tube Support	Ts *B*
Fluoroscopic Table with intensifier and TV*	Fl *B* or †Fl C Fl D or †Fl E

*100mm (or equivalent) camera if justified
†if a case can be made on myelographic work-load

24.7.8 Second fluoroscopic facility

Generator	Gen *C*
2 Tubes	
1 Tube Support	Ts *B*
Fluoroscopic Table with intensifier and TV	Fl *B*

24.7.9 Dental radiographic facilities

Dental X-ray Unit	Den *A*
Pan-tomographic Unit	Den *B*

24.7.10 Skull radiographic facility

Skull Unit	Sk *A*

24.7.11 Peripheral/Abdominal angiographic facility (if a case can be made)

Accessories for one of the fluoroscopic facilities	Ang B
Rapid film-changer	
Contrast injector	

24.7.12 Mammographic facility (if case can be made)

Mammographic apparatus	Mam A or Mam *B*

24.7.13 Processing (daylight)

3 Automatic Processors	2 Proc B and 1 Proc C
1 Dental Processor	Proc D
2 Silver Recovery Units	

Small film processor Proc E may be necessary if a 100mm camera is provided (see 24.7.6)

24.8 Eight room department

24.8.1 Introduction

This department differs from a 7 room department by the addition of more sophisticated facilities for peripheral/abdominal angiography.

24.8.2 Facility dedicated to chest radiography

Automated cassetteless chest unit Ch *F* complete with tube and generator (Gen *C*) and integral processor (Proc *B*)

24.8.3 Second general radiographic facility

Generator	Gen *C*
1 Tube	
1 Tube Support	Ts *B*
Radiographic Table	Rt *B*
'Bucky' Stand	Ch *B*

24.8.4 Third general radiographic facility

Generator	Gen *C*
1 Tube	
1 Tube Support	Ts *B*
Radiographic Table	Rt A or *B*
'Bucky' Stand	Ch *B*

24.8.5 Tomographic and fourth general radiographic facility

Generator	Gen *C*
1 Tube	
1 Tube Support	Ts *B*
1 Radiographic Table	Rt *A* or Rt B
Tomographic unit	Tom B or Tom *C*
Chest Stand	Ch *A*

24.8.6 Two-table intravenous urographic facility

Generator	Gen *C*
2 Tubes	
2 Tube Supports	2 Ts *A*
2 Radiographic Tables	2 Rt A or 2 Rt *B*
2 Tomographic attachments	2 Tom *A*

24.8.7 Main fluoroscopic facility (possibly allowing myelography)

Generator	Gen *C*
2 Tubes	
1 Tube Support	Ts *B*

Fluoroscopic Table with image intensifier and TV*	Fl *B* or †Fl C Fl *D* or †Fl E

*100mm (or equivalent) camera if justified
†if a case can be made on myelographic work-load

24.8.8 Second fluoroscopic facility

Generator	Gen *C*
2 Tubes	
1 Tube Support	Ts *B*
Fluoroscopic Table with image intensifier and TV	Fl *B*

24.8.9 Angiographic facility

Angiographic apparatus	Ang B or *C*

24.8.10 Dental radiographic facilities

Dental X-ray Unit	Den *A*
Pan-tomographic Unit	Den *B*

24.8.11 Skull radiographic facility

Skull Unit	Sk *A*

24.8.12 Mammographic facility (if a case can be made)

Mammographic apparatus	Mam A or Mam *B*

24.8.13 Processing (daylight)

4 Automatic Processors	3 Proc B and 1 Proc C
1 Automated Processor integral with automated cassetteless chest unit	Proc B
1 Dental Processor	Proc D
2 Silver Recovery Units	

Small-film processor Proc E may be necessary if a 100mm camera is provided (see 24.8.7)

24.9 Nine room department

24.9.1 Introduction

A nine room department differs from an eight room department by the addition of a facility dedicated to chest radiography and provision of simple accessories for paediatric work.

24.9.2 Facility dedicated to chest radiography

Automated cassetteless chest unit Ch *F* complete with tube and generator (Gen *C*) and integral processor (Proc *B*)

24.9.3 First general radiographic facility

Generator	Gen *C*
1 Tube	
1 Tube Support	Ts *B*
Radiographic Table	Rt B or Rt *C*
'Bucky' Stand	Ch B or Ch *C*

24.9.4 Second general radiographic facility

Generator	Gen *C*
1 Tube	
1 Tube Support	Ts *B*
Radiographic Table	Rt *B*
'Bucky' Stand	Ch *B*

24.9.5 Third general radiographic facility

Generator	Gen *C*
1 Tube	
1 Tube Support	Ts *B*
Radiographic Table	Rt A or Rt *B*
'Bucky' Stand	Ch *B*

24.9.6 Tomographic and fourth general radiographic facility

Generator	Gen *C*
1 Tube	
1 Tube Support	Ts *B*
1 Radiographic Table	Rt *A* or Rt B
Tomographic unit	Tom B or Tom *C*
Chest Stand	Ch *A*

24.9.7 Two-table intravenous urographic facility

Generator	Gen *C*
2 Tubes	
2 Tube Supports	2 Ts *A*
2 Radiographic Tables	2 Rt A or 2 Rt *B*
2 Tomographic attachments	2 Tom *A*

24.9.8 Main fluoroscopic facility (possibly allowing myelography)

Generator	Gen *C*
2 Tubes	
1 Tube Support	Ts *B*
Fluoroscopic Table with image intensifier and TV*	Fl *B* or †Fl C Fl *D* or †Fl E

*100mm (or equivalent) camera if justified
†if a case can be made on myelographic workload

24.9.9 Second fluoroscopic facility

Generator	Gen *C*
2 Tubes	

1 Tube Support	Ts *B*
Fluoroscopic Table with image intensifier and TV	Fl *B*

24.9.10 Paediatric facilities

Paediatric accessories for one of the fluoroscopic facilities	Paed *B*
plus (if a case can be made) Paediatric Chest Unit	Paed *A*

24.9.11 Angiographic facility

Angiographic apparatus	Ang *C*

24.9.12 Dental radiographic facilities

Dental X-ray unit	Den *A*
Pan-tomographic Unit	Den *B*

24.9.13 Skull radiographic facilities

Skull Unit	Sk *A*

24.9.14 Mammographic facility (if a case can be made)

Mammographic apparatus	Mam A or Mam *B*

24.9.15 Processing (daylight)

4 Automatic Processors	3 Proc B and 1 Proc C
1 Automatic Processor integral with automated cassetteless chest unit	Proc B
1 Dental processor	Proc D
3 Silver Recovery units	

Small-film processor Proc E may be necessary if a 100mm camera is provided (see 24.9.8)

24.10 Ten room department

24.10.1 Introduction

A ten room department differs from a nine room department by the addition of a further fluoroscopic facility and recognition of a mammographic facility as basic.

24.10.2 Facility dedicated to chest radiography

Automated cassetteless chest unit Ch *F* complete with tube and generator (Gen *C*) and integral processor (Proc *B*).

24.10.3 First general radiographic facility

Generator	Gen *C*
1 Tube	
1 Tube Support	Ts *B*
Radiographic Table	Rt B or Rt *C*
'Bucky' Stand	Ch B or Ch *C*

24.10.4 Second general radiographic facility

Generator	Gen *C*
1 Tube	
1 Tube Support	Ts *B*
Radiographic Table	Rt *B*
'Bucky' Stand	Ch *B*

24.10.5 Third general radiographic facility

Generator	Gen *C*
1 Tube	
1 Tube Support	Ts *B*
Radiographic Table	Rt A or Rt *B*
'Bucky' Stand	Ch *B*

24.10.6 Tomographic and fourth general radiographic facility

Generator	Gen *C*
1 Tube	
1 Tube Support	Ts *B*
1 Radiographic Table	Rt *A* or Rt B
Tomographic Unit	Tom B or Tom *C*
Chest Stand	Ch *A*

24.10.7 Two-table intravenous urographic facility

Generator	Gen *C*
2 Tubes	
2 Tube Supports	2 Ts *A*
2 Radiographic Tables	2 Rt A or 2 Rt *B*
2 Tomographic attachments	2 Tom *A*

24.10.8 Main fluoroscopic facility (possibly allowing myelography)

Generator	Gen *C*
2 Tubes	
1 Tube Support	Ts *B*
Fluoroscopic Table with image intensifier and TV*	Fl *B* or †Fl C Fl *D* or †Fl E

*100mm (or equivalent) camera if justified
†if a case can be made on myelographic workload

24.10.9 Second fluoroscopic facility

Generator	Gen *C*
2 Tubes	

1 Tube Support	Ts *B*
Fluoroscopic Table with image intensifier and TV	Fl *B*

24.10.10 Third fluoroscopic facility

Generator	Gen *C*
2 Tubes	
1 Tube Support	Ts *B*
Fluoroscopic Table with image intensifier and TV	Fl *B*

24.10.11 Paediatric facilities

Paediatric accessories for one of the fluoroscopic facilities	Paed *B*
plus (if a case can be made) Paediatric Chest Unit	Paed *A*

24.10.12 Angiographic facility

Angiographic apparatus	Ang C

24.10.13 Dental radiographic facilities

Dental X-ray Unit	Den *A*
Pan-tomographic Unit	Den *B*

24.10.14 Skull radiographic facilities

Skull unit	Sk *A*

24.10.15 Mammographic facility

Mammographic apparatus	Mam A or Mam *B*

24.10.16 Processing (daylight)

4 Automatic processors	3 Proc B and 1 Proc C
1 Automatic processor integral with automated cassetteless chest unit	Proc B
1 Dental processor	Proc D
3 Silver recovery units	
Small-film processor Proc E may be necessary if a 100mm camera is provided (see 24.10.8)	

24.11 Eleven and twelve room departments

24.11.1 Introduction

An eleven room department differs from a ten room department by the addition of *either* a further facility for intravenous urography (see 24.11.9) *or* a further general radiographic facility (see 24.11.5). Which will be chosen will depend on local circumstances but the additional urographic facility will normally be preferred. A twelve room department will include both the above facilities as given below. It is also recognised that a dedicated paediatric fluoroscopic table Paed C might be justified but it should be noted that such a choice would significantly reduce the capacity for adult fluoroscopic examinations.

24.11.2 Facility dedicated to chest radiography

Automated Cassetteless Chest Unit Ch *F* complete with tube and generator (Gen *C*) and integral processor (Proc *B*).

24.11.3 First general radiographic facility

Generator	Gen *C*
1 Tube	
1 Tube Support	Ts *B*
Radiographic Table	Rt B or Rt *C*
'Bucky' Stand	Ch B or Ch *C*

24.11.4 Second general radiographic facility

Generator	Gen *C*
1 Tube	
1 Tube Support	Ts *B*
Radiographic Table	Rt *B*
'Bucky' Stand	Ch *B*

24.11.5 Third general radiographic facility

Generator	Gen *C*
1 Tube	
1 Tube Support	Ts *B*
Radiographic Table	Rt A or Rt *B*
'Bucky' Stand	Ch *B*

24.11.6 Fourth general radiographic facility

Generator	Gen *C*
1 Tube	
1 Tube Support	Ts *B*
Radiographic Table	Rt A or Rt *B*
'Bucky' Stand	Ch *B*

24.11.7 Tomographic and fifth general radiographic facility

Generator	Gen *C*
1 Tube	
1 Tube Support	Ts *B*
1 Radiographic Table	Rt *A* or Rt B
Tomographic unit	Tom B or Tom *C*
Chest Stand	Ch *A*

24.11.8 First two-table intravenous urographic facility

Generator	Gen *C*
2 Tubes	
2 Tube Supports	2 Ts *A*
2 Radiographic Tables	2 Rt A or 2 Rt *B*
2 Tomographic attachments	2 Tom *A*

24.11.9 Second two-table intravenous urographic facility

Generator	Gen *C*
2 Tubes	
2 Tube Supports	2 Ts *A*
2 Radiographic Tables	2 Rt A or 2 Rt *B*
2 Tomographic attachments	2 Tom *A*

24.11.10 Main fluoroscopic facility (possibly allowing myelography)

Generator	Gen *C*
2 Tubes	
1 Tube Support	Ts *B*
Fluoroscopic Table with image intensifier and TV*	Fl *B* or †Fl C Fl *D* or †Fl E

*100mm (or equivalent) camera if justified
†if a case can be made on myelographic workload

24.11.11 Second fluoroscopic facility

Generator	Gen *C*
2 Tubes	
1 Tube Support	Ts *B*
Fluoroscopic Table with image intensifier and TV	Fl *B*

24.11.12 Third fluoroscopic facility

Generator	Gen *C*
2 Tubes	
1 Tube Support	Ts *B*
Fluoroscopic Table with image intensifier and TV	Fl *B*

24.11.13 Paediatric facilities

Either paediatric accessories for one of the fluoroscopic facilities	Paed *B*
or if a case can be made, dedicated paediatric fluoroscopic unit	Paed C
plus, if a case can be made, Paediatric Chest Unit	Paed *A*

24.11.14 Angiography facility

Angiographic apparatus	Ang C

24.11.15 Dental radiographic facilities

Dental X-ray Unit	Den *A*
Pan-tomographic Unit	Den *B*

24.11.16 Skull radiographic facility

Skull Unit	Sk *A*

24.11.17 Mammographic facility

Mammographic apparatus	Mam A or Mam *B*

24.11.18 Processing (daylight)

5 Automatic processors	4 Proc B and 1 Proc C
1 Automatic processor integral with film changer unit	Proc B
1 Dental Processor	Proc D
4 Silver recovery units	

Small-film processor Proc E may be necessary if a 100mm camera is provided (see 24.11.10).

Note: Processor provision will be as above for both an eleven and twelve room department.

25 Provision of primary radiological equipment not within the scope of chapter 24

25.1 Mobile and portable X-ray equipment

It is extremely difficult to set a baseline for the provision of mobile X-ray equipment. The number of mobiles of type Mob A, B or C required will depend on the topography of the hospital and the number of beds. It is obviously important that mobile ward radiography be undertaken efficiently and this may prevent the storage of all mobiles within the radiodiagnostic department and their dispatch always from that point. It may often be essential to locate mobiles in various locations throughout a hospital and the extent to which this is necessary will depend on, for example, the distance of wards from the radiodiagnostic department, the number of floors in the hospital, the efficiency of any lift system, the number of separate buildings and the practicality of moving mobiles between them. The minimum envisaged would be 1 mobile for radiodiagnostic departments with up to 2 radiodiagnostic rooms, 2 mobiles for 3 to 6 rooms, 3 mobiles for 7 to 9 rooms and 4 mobiles for 10 to 12 rooms but factors such as those given above may provide justification for significantly more. The minimum provision excludes mobiles dedicated to specialist services/areas eg ITU, theatres. One portable unit should be adequate for any radiodiagnostic department.

25.2 Ultrasonic equipment

HBN6 states that any room devoted to ultrasonic procedures is to be counted as additional to radiodiagnostic rooms. Thus the provision of such rooms and the equipment has been related to the size of a radiodiagnostic department which in turn is determined by the number of radiodiagnostic rooms.

Ultrasonic equipment will normally be located in radiodiagnostic departments with 4 or more radiodiagnostic rooms. In hospitals with radiodiagnostic departments with 6 or more radiodiagnostic rooms ultrasonic equipment will normally in addition be required in the obstetric department. In hospitals with departments with 4 or 5 radiodiagnostic rooms ultrasonic equipment may be located in the obstetric department if the latter is in a separate building and/or excessively distant.

The primary ultrasonic equipment recommended is as follows:

Number of radiodiagnostic rooms	*Number of ultrasonic rooms* and equipment*
4 and 5	Static B scanner Ult B and simple real-time scanner Ult A in one room in radiodiagnostic department. (Ult A may be in obstetric department).
6 and 7	Static B scanner Ult B in one room in radiodiagnostic department. Static B scanner Ult B and simple real-time scanner Ult A in obstetric department.
8 to 11	Static B scanner with real-time facilities Ult C, simple real-time scanner Ult A and A and T-M mode "cardiological" unit Ult E in one room in radiodiagnostic department. Static B scanner Ult B and simple real-time scanner Ult A in obstetric department.
12	Simple real-time scanner Ult A, static B scanner with real-time facilities Ult C, real-time scanner with static B mode Ult D and A and M-mode "cardiological" unit Ult E in two rooms in radiodiagnostic department. Static B scanner Ult B and simple real-time scanner Ult A in obstetric department.

*The size of the room may not be that of a standard radiodiagnostic room (see Health Building Note No 6).

25.3 Equipment for special radiological procedures

Rooms dedicated to special procedures such as cranial, selective coronary and cardio-angiography are treated in Health Building Note Number 6 as additional to the basic room count (see paragraph 1.2) and their provision would need therefore to be specially justified. Such installations will often be a regional facility and be associated with a regional speciality. The equipment provided will depend on local circumstances but the comments given in Chapter 11 paragraph 11.3 and Chapter 12 paragraphs 12.4 to 12.9 will be pertinent.

25.4 Computerised tomography (CT) scanners

At the time of compilation of this Equipment Note, CT scanners were undergoing such significant and rapid technological change that it was deemed inappropriate to describe the various Options avail-

able, although advice about models on the market is available from DHSS. In Health Building Note Number 6 any room in which a CT scanner is installed is treated as additional to the basic room count (see paragraph 1.2). Equipment is extremely expensive not only with respect to capital outlay but also with respect to maintenance and running costs and thus full justification for provision will be essential, based on a work-load which will fully utilise scanner capacity. It is thought inappropriate to advise in this Equipment Note on the circumstances in which a CT scanner should be considered. In accordance with guidance issued by the Health Departments it is expected that major neurological and neuro-surgical centres will be provided with a CT scanner and extension of provision beyond such centres is likely to be in teaching hospitals or larger DGHs, especially those associated with radiotherapy and oncology services.

25.5 Radiological equipment for operating theatres

Fixed X-ray equipment will not normally be provided in operating theatres. Where radiography is required a mobile X-ray unit should be used and one will often be reserved for theatre use and kept in the theatre precinct.

A mobile image intensifier (Mob I A or Mob I B) reserved for operating theatre work will be justified if sufficient operations for which such equipment is suitable are undertaken. Examples of appropriate applications are given in paragraph 18.1. Provision of an image storage device should be considered (see paragraph 23.6).

25.6 Radiological equipment for accident and emergency work

The amount (if any) of accident and emergency work undertaken in a radiological department will vary considerably with local circumstances and health authority policy. For many departments the accident and emergency work which arises could be handled by the equipment provisions outlined in Chapter 24 and detailed in the schedules of Chapter 26 provided, as suggested in Health Building Note No 6, the radiological department is within reasonable proximity of the Accident and Emergency Department and the lay-out of the radiological department itself is arranged in a suitable manner eg allows some segregation of Accident and Emergency patients from other patients and where applicable allows one or more rooms together with a processor to provide a 24 hour cover.

However for hospitals designated to provide major Accident and Emergency services on a 24 hour seven day a week basis a case may be made for radiological facilities over and above those recommended in Chapters 24 and 26. According to work-load and local circumstances one or exceptionally two extra radiodiagnostic rooms may be required. Recommendations for equipping such rooms where they are justified are given in Chapter 27 "Additional Accommodation".

25.7 Computers

Health Building Note No 6 recognises that there may be an increasing role to be played by computers and microprocessor machines in the diagnostic imaging process and in handling patient records, management data etc. However the role of computers at the time of publication of this Equipment Note was insufficiently defined for any specific advice to be given.

Library and Information Service
Polytechnic of North London
Holloway Road
London N7 8DB

26 Schedules of equipment: Basic Accommodation

26.1 Introduction

This chapter details the equipment recommended for radiodiagnostic departments with 2 to 12 radiodiagnostic rooms and includes the equipment for general areas within such departments. Included in the schedules is the primary radiological equipment listed in Chapters 24 and 25. This equipment has been assigned to particular rooms but it is emphasised that the arrangement is but one example of a suitable distribution: others may be better suited to local needs. Equipment is classified into four groups as described in Chapter 2.

Recommended schedules of equipment for "Additional Accommodation" are given in Chapter 27.

26.2 Room and activity data code

The appropriate Computer Room Code (CRC) in the Standard Equipment Scheduling System is shown for each area dealt with in this chapter. Activity Unit Data Sheet codes will be included in the Health Building Note No 6.

		CRC
26.3	**Reception and administration**	
26.3.1	Reception, Appointments, Master index	72840 – 72940
26.3.2	Records area	73060 – 73160
26.3.3	Office	72950 – 73050
26.3.4	Main waiting area	61610 – 61710
26.3.5	Sub waiting area	61720 – 61820
26.3.6	Bed, wheelchair and trolley waiting area	61830 – 61880
26.3.7	Washroom/WC: ambulant patients	52620
26.3.8	Washroom/WC: wheelchair assisted patients	52650
26.4	**Changing, preparation, etc**	
26.4.1	Changing cubicles	52890
26.4.2	Lavage	12790
26.4.3	Washroom/WC barium enema patients	52900
26.4.4	Patients' recovery area	12800
26.4.5	Shower/handwash: ambulant patients	52670
26.4.6	Clean utility	34560
26.4.7	Dirty utility	34570
26.4.8	Nursing staff base	12920
26.5	**Radiodiagnostic rooms**	
26.5.1	Two-room department	12810
26.5.2	Three-room department	12820
26.5.3	Four-room department	12830
26.5.4	Five-room department	12840
26.5.5	Six-room department	12850
26.5.6	Seven-room department	12860
26.5.7	Eight-room department	12870
26.5.8	Nine-room department	12880
26.5.9	Ten-room department	12890
26.5.10	Eleven-room department	12900
26.5.11	Twelve-room department	12910
26.6	**Ultrasonic rooms**	12930 – 12960
26.7	**Film processing, viewing, etc**	
26.7.1	Dark room(s) and associated processing/viewing/dispensing area	21410
26.7.2	Daylight film processing/viewing/dispensing area(s)	21420
26.7.3	X-ray film processors: types and numbers	
26.7.4	Silver recovery	21480 – 21510
26.7.5	X-ray film cassettes with screens	
26.7.6	Computer room	73170
26.7.7	Central reporting	73180
26.7.8	Sorting and collating	21440
26.7.9	Film despatch	21450
26.8	**Radiologists, radiographers and other staff**	
26.8.1	Consultant's Room	12970
26.8.2	Typists' Room	73190
26.8.3	Seminar Room	81670
26.8.4	Superintendent Radiographers' Office	73200
26.8.5	Washroom/W.C. – Male staff	52610
26.8.6	Washroom/W.C. – Female staff	52600
26.8.7	Staff cloaks: female	52910 – 52920
26.8.8	Staff room } for radiographers	81680 – 81780
26.8.9	Beverage Bay } for radiographers	34590 – 34650
26.8.10	Cleaning space	34580
26.8.11	Porters' waiting area	73210
26.9	**Storage**	
26.9.1	General storage	34710
26.9.2	Unused film store	34720 – 34730
26.9.3	Radiographs	34740 – 34750
26.9.4	Chemical storage	34760
26.9.5	Mobile X-ray unit store	34660 – 34700
26.10	**Workshop**	21460
26.11	**Departmental items**	92320 – 92530

	Number of Radiodiagnostic rooms served										
	2	3	4	5	6	7	8	9	10	11	12
26.3.1 Reception/Appointments/Master Index											
Group 1											
Cupboard on plinth, 2 shelves, lockable	1	1	1	1	1	1	2	2	2	2	3
Departmental intercomm master unit	1	1	1	1	1	1	1	1	1	1	1
Drawer unit on plinth 6 drawer, with cut away front [600 × 700mm]	4	8	8	8	10	14	16	18	20	22	24
Drawer unit on plinth, 3 drawer lockable	1	1	1	1	1	2	2	2	2	2	3
Fire bell muting switch	1	1	1	1	1	1	1	1	1	1	1
Front panel with plinth inset [1100 × 2500mm]	2	4	4	4	5	7	8	9	10	11	12
Hatch, sliding, horizontal glass and lining, lockable	1	1	1	1	1	1	2	2	2	2	3
Indicator light from control drugs cupboard	1	1	1	1	1	1	1	1	1	1	1
Patient/Staff call indicating light and buzzer	1	1	1	1	1	1	1	1	1	1	1
Pigeon hole unit [200 × 1800 × 200mm]	3	3	3	3	4	4	4	5	5	6	6
Pigeon hole unit with 'phone outlet plate inset	1	1	1	1	1	1	2	2	2	2	3
Socket outlet, 13A, switched, double	4	4	4	8	8	8	11	11	11	11	11
Socket outlet, 13A, switched, single	2	2	2	2	2	2	4	4	4	4	4
Telephone outlet:											
internal	3	4	4	5	5	6	8	8	9	10	10
outside line	3	4	4	5	5	6	8	8	9	10	10
Worktop [1200 × 500mm]	1	1	1	1	1	1	2	2	2	2	3
Worktop [1100 × 1800mm]	1	1	1	1	1	1	2	2	2	2	3
Group 3											
Cabinet, card index 9 double drawer [Cards 152 × 102mm]	11	16	21	26	32	37	42	47	53	58	64
Chair, adjustable [500 – 625mm]	1	2	2	2	3	4	4	5	5	6	6
Chair, adjustable [450 – 550mm]	2	2	2	3	3	3	4	4	4	4	4
Cupboard, stationery [900 × 900 × 450mm]	1	1	1	1	1	1	2	2	2	2	2
Cupboard, metal, lockable [1800 × 900 × 450mm]	1	1	1	1	1	1	2	2	2	2	2
Desk, typist, L shaped	2	2	2	3	3	3	4	4	4	4	4
Typewriter, electric	2	2	2	3	3	3	4	4	4	4	4
Group 4											
Dispenser, adhesive tape four colours	2	2	2	2	3	3	4	4	5	5	6
Tray incoming films	1	1	1	1	1	1	2	2	2	2	3
Tray correspondence	2	2	2	2	4	4	6	6	8	8	8

26.3.2 Records area

Group 1											
Departmental Intercom	1	1	1	1	1	1	1	1	1	1	1
Fused spur unit, 13A, switched, indicating	2	2	2	2	2	4	4	4	4	4	4
Socket outlet, 13A, switched, double	1	1	1	1	1	1	2	2	2	2	2
Socket outlet, 13A, switched, single	2	2	3	3	3	3	3	4	4	4	4
Telephone outlet	1	1	1	1	1	1	2	2	2	2	2
Worktop [1200 × 500mm]	1	1	1	1	1	1	2	2	2	2	3
Group 2											
ILLUMINATOR, X-RAY FILM, DOUBLE, WALL MOUNTED [with spotlight facility]	2	2	2	2	2	4	4	4	4	4	4
Group 3											
Chair adjustable [450 – 550mm]	1	1	1	1	1	1	2	2	2	2	3
Chair, upright, with arms	1	1	1	1	1	1	2	2	2	2	2
Chair, upright, stacking	1	1	1	1	1	1	2	2	2	2	3
Desk, pedestal, single	1	1	1	1	1	1	2	2	2	2	2
Rack, X-Ray films/documents, 5 tier	20	46	66	78	94	121	148	163	169	171	179
Stool, kick, retractable castors	2	2	3	3	4	4	5	5	6	6	7
Trolley, X-Ray film transport	2	3	3	3	4	5	6	7	7	7	7
Typewriter, electric	1	1	1	1	1	1	2	2	2	2	2

	Number of Radiodiagnostic rooms served										
	2	3	4	5	6	7	8	9	10	11	12
26.3.2 Records area (continued)											
Group 4											
Desk set	1	1	1	1	1	1	2	2	2	2	2
Dispenser, adhesive tape, four colours	2	2	2	2	3	3	4	4	5	5	6
26.3.3 Office											
Group 1											
Departmental intercom	1	1	1	1	1	1	1	1	1	1	1
Hook, hat and coat, three	1	2	3	4	5	6	6	7	7	8	8
Mirror, wall mounted	1	1	1	1	1	1	2	2	2	2	2
Panel, display, wall mounted	1	1	1	1	1	1	1	1	1	1	1
Socket outlet, 13A, switched, double	2	3	4	5	6	7	8	9	9	10	10
Socket outlet, 13A, switched, single	1	1	1	1	1	1	2	2	2	2	3
Telephone outlet											
internal	2	3	4	5	6	7	8	9	9	10	11
outside line	2	3	4	5	6	7	8	9	9	10	11
Track, window curtain	1	1	1	1	1	1	1	1	1	1	1
Group 2											
ILLUMINATOR X-RAY FILM, DOUBLE, WALL MOUNTED [with spotlight facility]	1	1	1	1	1	1	2	2	2	2	3
Group 3											
Cabinet filing, 4-drawer	1	2	3	4	5	6	6	7	7	8	8
Chair, adjustable [450 – 550 mm]	1	2	3	4	5	6	6	7	7	8	8
Chair, upright stacking	1	2	3	4	5	6	6	7	7	8	8
Chair, upright with arms	1	2	3	4	5	6	6	7	7	8	8
Cupboard, stationery	1	1	1	1	1	1	2	2	2	2	2
Desk, typist, L shaped	1	2	3	4	5	6	6	7	7	8	8
Dictating machine, playback unit	1	2	3	4	5	6	6	7	7	8	8
Trolley, X-Ray film transport	1	1	1	1	1	1	1	1	1	1	1
Typewriter, electric	1	2	3	4	5	6	6	7	7	8	8
Group 4											
Bin, waste paper	1	2	3	4	5	6	6	7	7	8	8
Curtain, window fire retardant, pair	1	1	1	1	1	2	2	2	2	2	2
Desk set	1	2	3	4	5	6	6	7	7	8	8
Dispenser, adhesive tape, four colours	2	2	2	2	3	3	4	4	5	5	6
Office requisites	1	2	3	4	5	6	6	7	7	8	8
Rack, stationery	1	2	3	4	5	6	6	7	7	8	8
Tray, incoming X-Ray films	1	1	1	1	1	1	2	2	2	2	3
Tray, correspondence	2	2	2	2	3	3	4	4	5	5	6
26.3.4 Main waiting area											
Group 1											
Clock, impulse	1	1	1	1	1	1	1	1	1	1	1
Fire alarm, break glass box, push and bell	1	1	1	1	1	1	1	1	1	1	1
Panel, display, wall mounted [800 × 1200 mm]	1	1	1	1	1	1	1	1	1	1	1
Socket outlet 13A switched, single	1	1	1	1	1	1	1	1	1	1	1
Group 3											
Chair, easy, with open arm low back	5	6	7	8	9	10	11	12	13	14	15
Chair, semi easy, unit type	7	10	13	16	19	22	25	28	31	34	37
Table, occasional, oblong with shelf [530 × 840 × 455 mm]	1	1	1	1	2	2	2	3	3	3	4
Table, occasional [400 × 600 × 600 mm]	1	1	1	1	1	1	1	2	2	2	2
Trolley, storage 5 tier	1	1	1	1	2	2	2	2	3	3	3
Group 4											
Bin, waste paper	1	1	1	1	2	2	2	2	3	3	3
Decorative features, general, allocation C	1	1	1	1	2	2	2	2	3	3	3

	Number of Radiodiagnostic rooms served										
	2	3	4	5	6	7	8	9	10	11	12
26.3.5 Sub Waiting area											
Group 1											
Socket outlet 13A switched single	1	1	1	1	1	1	1	1	1	1	1
Group 3											
Chair, easy, with open arms, low back	1	2	3	4	5	6	7	8	9	10	11
Chair, semi easy, unit type	3	4	5	6	7	8	9	10	11	12	13
Table, occasional, with shelf [530 × 840 × 455mm]	1	1	1	1	1	1	1	1	1	1	1
Table occasional [400 × 600 × 600mm]	–	–	1	1	1	1	1	1	1	1	1
Group 4											
Bin, waste paper	1	1	1	1	1	1	1	1	1	1	1
Curtain, window, fire retardant, pair	1	1	1	1	1	1	1	1	1	1	1
Decorative features, general, allocation B	1	1	1	1	1	1	1	1	1	1	1
26.3.6 Bed, wheelchair and trolley waiting area											
Group 1											
Patient/Nurse call, extender, pear push, reassurance lamp and reset unit	1	1	2	2	3	3	4	4	5	5	6
Socket outlet, 13A switched, double	2	2	4	4	6	6	8	8	10	10	12
Group 4											
Curtain, screening, changing cubicle, fire retardant	1	1	1	1	1	1	2	2	2	2	3

26.3.7 Washroom/WC: Ambulant patients

	Quantity
Group 1	
Basin, medium, with plug [500 × 400mm]	1
Holder, toilet roll, surface mounted	1
Hook, double, wall mounted	1
Mirror, wall mounted [600 × 300mm]	1
Nurse call push with reassurance lamp and reset unit	1
Rail, grab, hinged, with leg, wall mounted	1
Rail, grab, horizontal, wall mounted [850mm]	1
Shelf [300 × 150mm]	1
Tap, pillar, deck mounted H and C	1 pr
WC, hospital type, clinical, with cistern concealed [500 × 350 × 400mm]	1
Group 2	
Dispenser, paper towel [BS1439]	1
Dispenser, soap	1
Group 3	
Holder, sack, small, freestanding	1
Group 4	
Brush, WC and holder	1

26.3.8 Washroom/WC: Wheelchair assisted patients

	Quantity
Group 1	
Back rest, padded, wall mounted [800 × 300mm]	1
Basin, medium, with plug [500 × 400mm]	1
Holder, toilet roll, surface mounted	1
Hook, double, wall mounted	1
Mirror, wall mounted [600 × 300mm]	1
Nurse call push with reassurance lamp and reset unit	1
Rail, grab, horizontal, cranked, wall mounted [2300mm]	1
Rail, grab, horizontal, wall mounted [600mm]	1
Rail grab/towel, wall mounted	1
Rail, towel	1
Shelf [300 × 150mm]	1
Tap, pillar, deck mounted H and C	1 pr
WC, hospital type, clinical, with cistern concealed [500 × 300 × 400mm]	1
Group 2	
Dispenser, paper towel [BS1439]	1
Dispenser, soap	1
Group 3	
Holder sack, small, foot operated, freestanding	1
Group 4	
Brush, WC and holder	1

26.4.1 Changing Cubicles

The following is required for each cubicle

	Quantity
Group 1	
Hook, single, large, wall mounted [Dressing gowns often provided in these cubicles are shown under departmental items]	1
Mirror, wall mounted	1
Rail, grab, horizontal, wall mounted [900mm]	1
Seat, wall mounted [900 × 400mm]	1
Shelf [300 × 150mm]	1

26.4.2 Lavage

	Quantity
Group 1	
Basin, medium, with plug	1
Bidet, with anti syphon valve, hand-spray and flexible hose, valve thermostatically controlled with feed to bidet [750 × 375 × 400mm]	1
Cupboard, 2 drawer, shelf on plinth [800 × 1200 × 500mm]	1
Departmental intercomm	1
Fused spur unit 13A, switched indicating	1
Holder, toilet roll, surface mounted	2
Hook single, small, wall mounted	1
Patient/Nurse ceiling pull cord with reassurance lamp and reset unit	1
Pull cord switch	1
Rail, grab, horizontal, wall mounted [600mm]	2
Shelf, melamine faced [300 × 150mm]	2
Socket outlet 13A, switched double	1
Tap, mixer wall mounted elbow action H and C	1 pr
Track, window curtain	1
Track, screening	1
WC adult, hospital type with cistern high level concealed [500 × 300 × 400mm]	1
Work top [1200 × 600mm]	1
Group 2	
Dispenser, paper towel [BS1439]	1
Dispenser, soap	1
Heater, radiant, wall mounted	1
Group 3	
Chair, upright stacking	1
Couch, exam/treatment, cover dispenser	1
Cupboard, metal, lockable [1800 × 900 × 450mm]	1
Holder, sack, small, foot operated, freestanding	1
Holder, sack, small, freestanding	1
Stool, adjustable [340 – 480mm]	1
Group 4	
Brush, WC and holder	1
Boots, theatre, pair	2
Bucket, plastic, 7 litre	2
Can, enema	2
Catheter, various	25
Curtain, screening WC/bidet	1 pr
Curtain, window, fire retardant, pair	1 pr
Mop bucket	1
Mop, floor, complete	2
Pillow	1
Tubes/connectors/clips, enema, allocation	1

26.4.3 Washroom/WC/Barium enema patients

	Quantity
Group 1	
Basin, medium with plug	1
Bidet, with anti-syphon valve, hand spray and flexible hose, valve thermostatically controlled with feed to bidet [750 × 375 × 400mm]	1
Holder, toilet roll, surface mounted	1
Hook, single small, wall mounted	1
Patient/Nurse call, ceiling pull cord with reassurance lamp and reset unit	1
Rail grab, horizontal, wall mounted [600mm]	1
Shelf, melamine faced [300 × 150mm]	1
Tap, mixer, wall mounted H and C	1 pr
WC adult, hospital type with cistern high level exposed [550 × 350 × 400mm]	1
Group 2	
Dispenser, paper towel [BS1439]	1
Dispenser, soap	1
Group 3	
Holder, sack, medium, foot operated, freestanding	1
Group 4	
Brush, WC and holder	1

26.4.4 Patient recovery area

The following is required for each recovery area

	Quantity
Group 1	
Anglepoise lamp, wall mounted	1
Basin, medium with plug [500 × 400mm]	1
Cupboard, on plinth, melamine faced and lined 2 shelves, lockable [800 × 1200 × 500mm]	1
Drawer, unit on plinth, melamine faced and lined 4 drawer, lockable [800 × 600 × 500mm]	1
Hook, single, small, wall mounted	1
Oxygen, outlet, wall mounted	1
Patient/Staff call unit with socket for extension, pear shaped and reassurance lamp and reset unit	1
Shelf, melamine faced [300 × 150mm]	1
Socket outlet, 13A, switched double	2
Suction outlet, wall mounted	1
Tap, pillar, H and C	1 pr
Worktop [1800 × 500mm]	1
Group 2	
Dispenser, paper towel [BS1439]	1
Dispenser, soap	1
Group 3	
Chair, upright, stacking	2
Holder, sack, small, freestanding	1
Group 4	
Curtain, partition, fire retardant, pair	1
Cup, feeding	1
Pillow	2
Sphygmomanometer	1
Tray, instrument	1

26.4.5 Shower/handwash – ambulant patients

Group 1	
Basin, medium, with plug	1
Dish soap, surface mounted	1
Hook, single, small, wall mounted	2
Mirror, wall mounted [600 × 300mm]	1
Nurse call, ceiling pull cord switch with reassurance lamp and reset unit	1
Rail, grab, horizontal, wall mounted	1
Roller towel, wall mounted [450mm]	1
Seat, tip up wall mounted [600 × 400mm]	1
Shaver, socket outlet	1
Shelf, melamine faced [300 × 150mm]	1
Shower floor, slip resistant and drainage outlet	1
Tap, pillar H and C	1 pr
Track, cubicle curtain	1
Valve thermostatically controlled handspray and flexible hose and wall brackets	1
Group 4	
Curtain, screening, washing cubicle/shower	1
Mat, bath	1
Mat, bath, internal, rubber, non slip	1

26.4.6 Clean Utility

Group 1	
Controlled drugs, electrical outlet	1
Cupboard, controlled drugs [600 × 300 × 300mm]	1
Cupboard, on plinth, 2 shelves, lockable [800 × 600 × 500mm]	1
Cupboard, wall mounted, melamine faced and lined 1 shelf, lockable [600 × 600 × 300mm]	1
Drawer, under worktop [100 × 500 × 500mm]	1
Fused spur unit, 13A, switched	1
Green master indicator, nurse call system	1
Light, wall mounted, incorporating switch, below drug cupboard	1
Panel, display, wall mounted [800 × 1200mm]	1
Sink, stainless steel, inset [2400 × 600mm]	1
Shelf melamine faced [600 × 400mm]	1
Shelf melamine faced [900 × 300mm]	5
Shelf melamine faced, adjustable [1800 × 400mm]	1
Shelf melamine faced, adjustable [1800 × 300mm]	2
Socket outlet 13A, switched, single	2
Tap bib, elbow action H and drinking	1 pr
Trolley securing device	1
Worktop, melamine faced [2400 × 600mm for inset sink]	1
Group 2	
Dispenser, paper towel [BS1439]	1
Dispenser, soap	1
Group 3	
Holder, sack, medium, freestanding	1
Holder, sack, small, freestanding	1
Trolley, medicine, s.s. frame, buffered [1250 × 750 × 450mm]	1
Trolley, dressing/instrument, s.s., buffered [750 × 450mm]	3
Rack, 9 basket	1
Refrigerator, 4 cu ft, under bench [110 watts]	1
Group 4	
Container, plastics [175 × 200 × 375mm]	6
Tray, instrument [300 × 300mm]	2
Tray, instrument [600 × 300mm]	2
Tray, instrument [600 × 600mm]	2

26.4.7 Dirty Utility

	Quantity
Group 1	
Board, chinagraph [(1) 450 × 400mm (2) 600 × 300mm]	2
Disposer unit, bedpan, with cold water and drainage outlet [1.5kW]	1
Drawer under worktop [100 × 500 × 500mm]	1
Fused spur unit, 13A, switched	1
Green master indicator, nurse call system	1
Isolator, switched for disposal unit	1
Plinth, floor mounted [2400 × 500mm]	1
Sink and drainer, stainless steel [(1) 1200 × 600mm (2) 1500 × 500mm]	2
Shelf [2700 × 400mm]	1
Shelf, melamine faced [(1) 2100 × 400mm (2) 2400 × 450mm]	2
Shelf, melamine faced, adjustable [(1) 600 × 200mm (2) 1500 × 400mm]	2
Slop hopper and worktop, stainless steel, exposed cistern, bib taps H and C [1050 × 535mm]	1
Socket outlet, 13A, switched, single	2
Worktop, melamine faced [900 × 600mm]	1
Worktop, removable [900 × 500mm]	1
Group 2	
Cabinet, urine test, lockable, complete, wall mounted	1
Dispenser, disposable bedpans	1
Dispenser, paper towel [BS1439]	3
Dispenser, soap	2
Holder, paper roll towel [BS1439]	1
Rack, six bedpan holders	1

	Quantity
Group 3	
Chair, sanitary	2
Holder, sack, small, freestanding	1
Holder, sack, medium, freestanding	1
Holder, sack, medium, foot operated, freestanding	2
Trolley, soiled linen, single ring [BS2854]	2
Refrigerator, 4 cu ft under bench [110 Watts]	1
Group 4	
Bedpan	2
Container specimen, various, set of 25	1
Glass, specimen	8
Holder, bedpan	8
Jug graduated, 1 pint	1
Stapler, paper sack	1
Urinal	2
Urinal, female	2
Urinometer	1

26.4.8 Nursing staff base

Group 1	
Clock impulse	1
Console unit with adjustable shelves and vertical dividers [300 × 800 × 300mm]	1
Console unit [300 × 450 × 300mm] recessed for telephone with control panel containing: –	
Console unit, bridge piece	1
Fire alarm mute switch	1
Switch, nurse call transfer	1
Telephone outlet, trimphone	1
Console unit cranked with adjustable shelves and vertical dividers [300 × 800 × 300mm o/a]	1
Departmental intercom	1
Desk top, frame and front panel [700 × 1500 × 800mm]	1
Desk top, frame and front panel [700 × 800 × 800mm]	1
Fused spur unit, 13A, switched, indicating	1
Indicator lights patient/nurse system	1
Lighting level control switches	1
Medical gas isolating valves	1
Panel display, wall mounted [800 × 1200mm]	1
Repeater light, controlled drug cupboard	1
Socket outlet, 13A, switched, double	2
Group 2	
Illuminator, X-ray film, double, wall mounted [with spot light facility]	1
Group 3	
Chair, adjustable [450 – 550mm]	3
Trolley, medical records	1
Trolley, X-ray film transport	1
Group 4	
Bin, waste paper	1
Holder, patients' index cards	1
Lantern, battery operated	1
Torch, hand, electric	1
Tray, correspondence	2

26.5.1 Two-room department

	Room 1 Rad	Room 2 Fl
Basic List		
Group 1		
Basin, medium, no plug	1	1
Clock, with sweep second hand	1	1
Cupboard with 2 shelves melamine faced [700 × 1200 × 500mm under worktop]	2	2
Departmental intercom	1	1
Dimmer [for room lights]	1	1
Fused spur unit, 13A, switched, indicating	1	1
Hook, hat and coat, 2	2	2
Mains isolator, with easy action lever [for X-ray equipment]	1	1
Panel display, wall mounted [800 × 600mm]	1	1
Patient/staff call push reassurance lamp and reset unit	1	1
Plinth [for cupboard]	2	2
Radiation warning light [to be provided at each entry]	1	1
Shelves, 2 melamine faced [1200 × 600mm]	2	2
Socket outlet, 13A, switched double	4	4
Tap, mixer, wall mounted, elbow action, H and drinking	1 pr	1 pr
Track, window curtain [or venetian blinds]	1	1
Whiteboard, wall mounted [800 × 600mm]	1	1
Worktop, melamine faced [1200 × 600mm]	1	1
FITMENT, PEGS, TWO PAIRS LEAD RUBBER GLOVES WALL MOUNTED	1	1
FITMENT, RAIL, GONAD SHIELD, WALL MOUNTED	1	1
RACK, PROTECTIVE APRON, FOUR, WALL MOUNTED	1	1
SCREEN, HINGED OR CUBICLE, PROTECTIVE WITH VIEWING WINDOW	1	1
Group 2		
Dispenser, paper, cup	1	1
Dispenser, paper towel [BS1439]	1	1
Dispenser, soap	1	1
ILLUMINATOR, X-RAY FILM, DOUBLE, WALL MOUNTED [with spot light facility]	1	1
Group 3		
BOX, CASETTE STORAGE, MOBILE	1	1
CABLES, HV, X-RAY TUBE	1 pr	2 prs
CABLES, HV, SUPPORT	1	2
CHAMBER, IONISATION	2	1
CHAIR, PATIENT'S, FOR DENTAL RADIOGRAPHY [May be located in Dental Dept]	1	–
CONE [Extra as required]	1	–
CONTROL UNIT, AUTOMATIC BRIGHTNESS	–	1
DENTAL X-RAY UNIT, INTRA-ORAL [May be located in Dental Dept]	1 (DenA)	–
GENERATOR, HV, WITH STATOR CONTROL AND AUTOMATIC EXPOSURE CONTROL	1 (GenC)	1 (GenC)
IMAGE INTENSIFIER WITH CCTV [Dual field. With suspension if necessary]	–	1
MARKER, X-RAY FILM DAYLIGHT	1	1
MONITOR, TV, SMALL	–	1
RADIOLOGICAL EQUIPMENT INTERFACE ALLOC – FLUOROGRAPHIC	–	1
RADIOLOGICAL EQUIPMENT INTERFACE ALLOC – RADIOGRAPHIC	1	–
STAND CHEST/VERTICAL WITH CASSETTE HOLDER FOR FRONT FACE [with compression bands]	1 (ChB)	1 (ChA)
TABLE, FLUOROSCOPIC	–	1 (FlA)
TABLE, RADIOGRAPHIC WITH CASSETTE HOLDER, LATERAL [with compression bands]	1 (RTB)	–
TOMOGRAPHIC ATTACHMENT	1 (TomA)	–
TUBE, X-RAY, HIGH SPEED	1	2
TUBE, X-RAY, SUPPORT [with floor or ceiling tracks as appropriate]	1 (TS B)	1 (TS A)
Chair, upright, stacking	2	3
Holder, sack, medium, freestanding	1	1
Steps, couch mounting	1	1
Trolley, dressing/instrument, s.s, buffered [450 × 450mm]	1	1
Group 4		
Apron, lead-rubber	2	3
Curtain, window, fire retardant, pair [or venetian blinds]	1	1
Gloves, lead-rubber, pair	1	2
Lead-rubber cassette masking, allocation	1	1
Marker, film, set	1	1
Measure, tape, 1800mm	1	1
Overlay foam, X-ray with plastic cover	1	1
Pillow	2	2
Positioning aids, set	1	1
Rule, plastic, 450mm, graduated	1	1
Sandbag	4	4
Shield, gonad, set	1	1
Tray	–	1
Torch, rubber	–	1
Additional List		
Group 3		
TUBE, X-RAY, HIGH SPEED [for skull unit]	1	–
CABLE, HV, PAIR [for skull unit]	1	–
CABLE, HV, SUPPORT	1	–
CONE, set as required	1	–
CASSETTE HOLDER, LATERAL	1	–
SKULL, X-RAY UNIT	1(SKA)	–
TROLLEY, X-RAY TRANSLUCENT TOP, WITH BRAKES	1	–
WARNING LIGHT, TUBE SELECTION	2	–
TUBE, X-RAY	1	–

26.5.2 Three-room department

	Room 1	Room 2	Room 3
	Rad	Rad with Tom	Fl
Basic List			
Group 1			
Basin, medium, no plug	1	1	1
Clock, with sweep second hand	1	1	1
Cupboard with 2 shelves melamine faced [700 × 1200 × 500mm under worktop]	2	2	2
Departmental intercom	1	1	1
Dimmer [for room lights]	1	1	1
Fused spur unit, 13A, switched, indicating	1	1	1
Hook, hat and coat, two	2	2	2
Mains isolator, with easy action lever [for X-ray equipment]	1	1	1
Panel display, wall mounted [800 × 600mm]	1	1	1
Patient/staff call push reassurance lamp and reset unit	1	1	1
Plinth [for cupboard]	2	2	2
Radiation warning light [to be provided at each entry]	1	1	1
Shelves, 2 melamine faced [1200 × 600mm]	2	2	2
Socket outlet, 13A, switched double	4	4	4
Tap, mixer, wall mounted, elbow action, H and drinking	1 pr	1 pr	1 pr
Track, window curtain [or venetian blinds]	1	1	1
Worktop, melamine faced [1200 × 600mm]	2	2	2
Whiteboard, wall mounted [800 × 600mm]	1	1	1
FITMENT, PEGS, LEAD-RUBBER GLOVES, TWO PAIR, WALL MOUNTED	1	1	1
FITMENT, RAIL, GONAD SHIELD, WALL MOUNTED	1	1	1
RACK, PROTECTIVE APRON, FOUR, WALL MOUNTED	1	1	1
SCREEN, HINGED OR CUBICLE, PROTECTIVE WITH VIEWING WINDOW	1	1	1
Group 2			
Dispenser, paper cup	1	1	1
Dispenser, paper towel [BS1439]	1	1	1
Dispenser, soap	1	1	1
ILLUMINATOR, X-RAY FILM, DOUBLE, WALL MOUNTED [with spot light facility]	1	1	1
Group 3			
BOX, CASETTE STORAGE, MOBILE	1	1	1
CABLES, HV, X-RAY TUBE, PAIR [*only 1 if integrated tube table]	1	1	2*
CABLES, HV, SUPPORT [*only 1 if integrated tube table]	1	1	2*
CHAMBER, IONISATION	2	1	1
CHAIR, PATIENT'S, FOR DENTAL RADIOGRAPHY [may be located in Dental Department]	–	1	–
CONE [extra as required]	–	1	–
CONTROL UNIT, AUTOMATIC BRIGHTNESS	–	–	1
DENTAL X-RAY UNIT, INTRA ORAL [may be located in Dental Department]	–	1 (DenA)	–
GENERATOR, HV, WITH STATOR CONTROL AND AUTOMATIC EXPOSURE CONTROL	1 (GenC)	1 (GenC)	1 (GenC)

26.5.2 Three-room department (continued)

	Room 1	Room 2	Room 3
	Rad	Rad with Tom	Fl
Basic List			
Group 3 (continued)			
IMAGE INTENSIFIER WITH CCTV SYSTEM [Dual field. With suspension if necessary]	–	–	1
MARKER, X-RAY FILM, DAYLIGHT	1	1	1
MONITOR, TV, SMALL	–	–	1
RADIOLOGICAL EQUIPMENT INTERFACE ALLOC – FLUOROGRAPHIC	–	–	1
RADIOLOGICAL EQUIPMENT INTERFACE ALLOC – RADIOGRAPHIC	1	1	–
STAND/CHEST, VERTICAL, WITH CASSETTE HOLDER FOR FRONT FACE [with compression band]	1 (ChC)	1 (ChA)	1 (ChA)
TABLE, FLUOROSCOPIC [with patient support and immobilisation devices]	–	–	1 (FlB)
TABLE, RADIOGRAPHIC WITH CASSETTE HOLDER, LATERAL [with compression bands]	1 (RTB)	1 (RTA)	–
TOMOGRAPHIC ATTACHMENT	–	1 (TomA)	–
TUBE, X-RAY, HIGH SPEED [*only 1 if integrated tube table]	1	1	2*
TUBE, X-RAY, SUPPORT [with floor or ceiling tracks as appropriate] [*not required if integrated tube table]	1 (TSB)	1 (TSA)	1 (TSB)*
Chair, upright, stacking	2	2	3
Holder, sack, medium, freestanding	1	1	1
Steps, couch mounting	1	1	2
Trolley, dressing/instrument s.s	1	1	1
Group 4			
Apron, lead-rubber	2	2	3
Curtain, window, fire retardant, pair [or venetian blinds]	1	1	1
Gloves, lead-rubber, pair	1	1	2
Lead rubber cassette masking, allocation	1	1	1
Marker, film, set	1	1	1
Measure, tape, 1800mm	1	1	1
Overlay foam, X-ray with plastic cover	1	1	1
Pillow	2	2	2
Positioning aids, set	1	1	1
Rule, plastic, 450mm, graduated	1	1	1
Sandbag	4	4	4
Shield, gonad, set	1	1	1
Torch, rubber	–	–	1
Tray	–	–	1
Additional List			
Group 3			
CABLES, HV, PAIR [for skull unit]	1	–	–
CABLES, HV, SUPPORT	1	–	–
CONES, set as required	1	–	–
CASSETTE HOLDER, LATERAL	1	–	–
TROLLEY, X-RAY TRANSLUCENT TOP WITH BRAKES	1	–	–
WARNING LIGHT, TUBE SELECTION	2	–	–
TUBE, X-RAY, HIGH SPEED [for skull unit]	1	–	–
SKULL X-RAY UNIT	1 (SkA)	–	–

26.5.3 Four-room department

	Room 1	Room 2	Room 3	Room 4
	Rad with Tom	Rad with Tom	Main Fl	2nd Fl
Basic List				
Group 1				
Basin, medium, no plug	1	1	1	1
Clock, with sweep second hand	1	1	1	1
Cupboard with 2 shelves, melamine faced [700 × 1200 × 500mm]	2	2	2	2
Departmental intercom	1	1	1	1
Dimmer [for room lights]	1	1	1	1
Fused spur unit, 13A switched, indicating	1	1	1	1
Hook, hat and coat two	2	2	2	2
Mains isolator, with easy action lever [for X-ray equipment]	1	1	1	1
Panel display, wall mounted [800 × 600mm]	1	1	1	1
Patient/staff call push reassurance lamp and reset unit	1	1	1	1
Plinth [for cupboard]	2	2	2	2
Radiation warning light [to be provided at each entry	1	1	1	1
Shelves 2, melamine faced [1200 × 600mm]	2	2	2	2
Socket outlet, 13A switched double	4	4	4	4
Tap, mixer, wall mounted, elbow action, H and drinking	1 pr	1 pr	1 pr	1 pr
Track, window curtain [or venetian blinds]	1	1	1	1
Whiteboard, wall mounted [800 × 600mm]	1	1	1	1
Worktop, melamine faced [1200 × 600mm]	2	2	2	2
FITMENT, PEGS, LEAD-RUBBER GLOVES, TWO PAIR WALL MOUNTED	1	1	1	1
FITMENT, RAIL, GONAD SHIELD, WALL MOUNTED	1	1	1	1
RACK, PROTECTIVE APRON, FOUR, WALL MOUNTED	1	1	1	1
SCREEN, HINGED OR CUBICLE, PROTECTIVE WITH VIEWING WINDOW	1	1	1	1
Group 2				
Dispenser, paper cup	1	1	1	1
Dispenser, paper towel [BS 1439]	1	1	1	1
Dispenser, soap	1	1	1	1
ILLUMINATOR, X-RAY FILM, DOUBLE WALL MOUNTED [with spotlight facility]	1	1	1	1
Group 3				
BOX, CASSETTE STORAGE, MOBILE	1	1	1	1
CABLE, HV, X-RAY TUBE, PAIR [*Only 1 if integrated tube table]	1	2	2*	2
CABLE, HV, SUPPORT [*Only 1 if integrated tube table]	1	2	2*	2
CASSETTE HOLDER, LATERAL	–	1	–	–
CHAMBER, IONISATION	2	1	1	1
CHAIR, PATIENT'S, FOR DENTAL RADIOGRAPHY [May be located in Dental Department]	1	–	–	–
CONE [Extra as required]	1	1	–	–
CONTROL UNIT, AUTOMATIC BRIGHTNESS	–	–	1	1
DENTAL X-RAY UNIT, INTRA ORAL [May be located in Dental Department]	1 (DenA)	–	–	–

26.5.3 Four-room department (continued)

	Room 1 Rad with Tom	Room 2 Rad with Tom	Room 3 Main Fl	Room 4 2nd Fl
Basic List				
Group 3 (continued)				
GENERATOR, HV, WITH STATOR CONTROL AND AUTOMATIC EXPOSURE CONTROL	1 (GenC)	1 (GenC)	1 (GenC)	1 (GenC)
IMAGE INTENSIFIER WITH CCTV SYSTEM [Dual field. With suspension if necessary]	–	–	2	2
MARKER, X-RAY FILM, DAYLIGHT	1	1	1	1
MONITOR, TV, SMALL	–	–	1	1
RADIOLOGICAL EQUIPMENT INTERFACE ALLOC-FLUOROGRAPHIC	–	–	1	1
RADIOLOGICAL EQUIPMENT INTERFACE ALLOC-RADIOGRAPHIC	1	1	–	–
SKULL, X-RAY UNIT	–	1 (SkA)	–	–
STAND/CHEST, VERTICAL, WITH CASSETTE HOLDER FOR FRONT FACE [With compression band)]	1 (ChC)	1 (ChA)	–	1 (ChA)
TABLE, FLUOROSCOPIC [With patient support and immobilisation devices]	–	–	1 (FlB)	1 (FlB)
TABLE, RADIOGRAPHIC WITH CASSETTE HOLDER LATERAL [With compression band]	1 (RtA)	1 (RtB)	–	–
TOMOGRAPHIC ATTACHMENT	1 (TomA)	1 (TomA)	–	–
TUBE, X-RAY, HIGH SPEED [*Only 1 if integrated tube table	1	2	2*	2
TUBE, X-RAY SUPPORT [With floor or ceiling tracks as appropriate. *Not required if integrated tube table]	1 (TSA)	1 (TSB)	1* (TSB)	1 (TSB)
TROLLEY X-RAY TRANSLUCENT TOP WITH BRAKES	–	1	–	–
WARNING LIGHT, TUBE SELECTION	–	2	–	–
Chair, upright, stacking	2	2	3	3
Holder, sack, medium, free standing	1	1	1	1
Steps, couch mounting	1	1	2	1
Trolley, dressing/instrument s.s [450 × 450 mm]	1	1	1	1
Group 4				
Apron, lead-rubber	2	2	3	3
Curtain, window, fire retardant, pair [or venetian blinds]	1	1	1	1
Gloves, lead-rubber, pair	1	1	2	2
Lead-rubber cassette masking allocation	1	1	1	1
Marker, film, set	1	1	1	1
Measure, tape, 1800 mm	1	1	1	1
Overlay foam, X-ray, with plastic cover	1	1	1	1
Pillow	2	2	2	2
Positioning aids, set	1	1	1	1
Rule, plastic, 450 mm	1	1	1	1
Sandbag	4	4	4	4
Shield, gonad, set	1	1	1	1
Tray	–	–	1	1
Torch, rubber	–	–	1	1

26.5.3 Four-room department (continued)

	Room 1	Room 2	Room 3	Room 4
	Rad with Tom	Rad with Tom	Main Fl	2nd Fl
Additional List:				
Group 3				
ANGIOGRAPHIC ACCESSORIES [If justified]	–	–	1 (AngB)	–
CAMERA, 100mm (or equivalent) [If justified]	–	–	1	–
FILM CHANGER, RAPID, MOBILE, FILM PROGRAMME SELECTOR AND KV REDUCTION UNIT [If justified]	–	–	1	–
SYRINGE, INJECTOR, AUTOMATIC [If justified]	–	–	1	–
TABLE, FLUOROSCOPIC [In lieu of FIB]	–	–	1 (FID)	–
TOMOGRAPHIC UNIT [In lieu of RTA and Tom A]	1 (TomB)	–	–	–

26.5.4 Five-room department

	Room 1	Room 2	Room 3	Room 4	Room 5
	Rad with Tom	Tom/ Rad	IVU	Main Fl	2nd Fl
Basic List					
Group 1					
Basin, medium, no plug	1	1	1	1	1
Clock, with sweep second hand	1	1	1	1	1
Cupboard with 2 shelves, melamine faced [700 × 1200 × 500mm under worktop]	2	2	2	2	2
Departmental intercom	1	1	1	1	1
Dimmer [for room lights]	1	1	1	1	1
Fused spur unit, 13A, switched, indicating	1	1	1	1	1
Hook, hat and coat, 2	2	2	2	2	2
Mains isolator, with easy action lever [for X-ray equipment]	1	1	1	1	1
Panel display, wall mounted [800 × 600mm]	1	1	1	1	1
Patient/staff call push reassurance lamp and reset unit	1	1	1	1	1
Plinth [for cupboard]	2	2	2	2	2
Radiation warning light [to be provided at each entry]	1	1	1	1	1
Shelves 2, melamine faced [1200 × 600mm]	2	2	2	2	2
Socket outlet, 13A, switched double	4	4	4	4	4
Taps, mixer, wall mounted, elbow action, H and drinking	1pr	1pr	1pr	1pr	1pr
Track, window curtain [or venetian blinds]	1	1	1	1	1
Whiteboard, wall mounted [800 × 600mm]	1	1	1	1	1
Worktop, melamine faced [1200 × 600mm]	2	2	2	2	2

26.5.4 Five-room department (continued)

	Room 1	Room 2	Room 3	Room 4	Room 5
	Rad with Tom	Tom/ Rad	IVU	Main Fl	2nd Fl
Basic List					
Group 1 (continued)					
FITMENT, PEGS, WALL MOUNTED TWO PAIR LEAD-RUBBER GLOVES	1	1	1	1	1
FITMENT, RAIL, GONAD SHIELD WALL MOUNTED	1	1	1	1	1
RACK, PROTECTIVE APRON, FOUR, WALL MOUNTED	1	1	1	1	1
SCREEN, HINGED OR CUBICLE, PROTECTIVE WITH VIEWING WINDOW	1	1	1	1	1
SCREEN, PROTECTIVE, WITH 2 NO. FOLDING END SECTION	–	–	1	–	–
Group 2					
Dispenser, paper cups	1	1	1	1	1
Dispenser, soap	1	1	1	1	1
Dispenser, paper towel [BS 1439]	1	1	1	1	1
ILLUMINATOR X-RAY FILM, DOUBLE WALL MOUNTED [with spot light facility]	1	1	1	1	1
Group 3					
BOX, CASSETTE STORAGE, MOBILE	1	1	1	1	1
CABLES, HV, X-RAY TUBE, PAIR [*only 1 if integrated tube table]	1	2	2	2*	2
CABLES, HV, SUPPORT	1	2	2	2*	2
CASSETTE HOLDER, LATERAL	–	1	–	–	–
CHAMBER, IONISATION	2	1	2	1	1
CHAIR, PATIENT'S, FOR DENTAL RADIOGRAPHY [may be located in Dental Department]	1	–	–	–	–
CONE [extra as required]	1	1	–	–	–
CONTROL UNIT, AUTOMATIC BRIGHTNESS	–	–	–	1	1
DENTAL X-RAY UNIT, INTRA ORAL [may be located in Dental Department]	1 (DenA)	–	–	–	–
GENERATOR, HV, WITH STATOR CONTROL AND AUTOMATIC EXPOSURE CONTROL	1 (GenC)	1 (GenC)	1 (GenC)	1 (GenC)	1 (GenC)
IMAGE INTENSIFIER WITH CCTV SYSTEM [Dual field. With suspension if necessary]	–	–	–	1	1
MARKER X-RAY FILM, DAYLIGHT	1	1	1	1	1
MONITOR, TV, SMALL	–	–	–	1	1
RADIOLOGICAL EQUIPMENT INTERFACE ALLOC-FLUOROGRAPHIC	–	–	–	1	1
RADIOLOGICAL EQUIPMENT INTERFACE ALLOC-RADIOGRAPHIC	1	1	2	–	–
SKULL X-RAY UNIT	–	1 (SkA)	–	–	–
STAND/CHEST, VERTICAL, WITH CASSETTE HOLDER FOR FRONT FACE [with compression band]	1 (ChC)	1 (ChA)	1 (ChA)	–	1 (ChA)
TABLE, FLUOROSCOPIC [with patient support and immobilisation devices]	–	–	–	1 (FlB)	1 (FlB)
TABLE, RADIOGRAPHIC, WITH CASSETTE HOLDER LATERAL [with compression band]	1 (RtC)	–	2 (RtB)	–	–
TOMOGRAPHIC ATTACHMENT	1 (TomA)	–	2 (TomA)	–	–

	Room 1	Room 2	Room 3	Room 4	Room 5
	Rad with Tom	Tom/ Rad	IVU	Main Fl	2nd Fl
26.5.4 Five-room department (continued)					
Basic List					
Group 3 (continued)					
TOMOGRAPHIC UNIT	–	1 (TomB)	–	–	–
TUBE, X-RAY, HIGH SPEED [*only 1 if integrated tube table]	1	2	2	2*	2
TUBE, X-RAY, SUPPORT [ϕ not required if integrated tube table. With floor or ceiling tracks as appropriate]	1 (TsB)	–	2 (TsA)	ϕ 1 (TsB)	1 (TsB)
TROLLEY, X-RAY TRANSLUCENT TOP WITH BRAKES	–	1	–	–	–
WARNING LIGHT, TUBE SELECTION	–	2	2	–	–
Chair, upright, stacking	2	2	2	3	3
Holder, sack, medium freestanding	1	1	1	1	1
Steps, couch mounting	1	1	2	1	1
Trolley, dressing/instrument, s.s., buffered [450 × 450mm]	1	1	1	1	1
Group 4					
Apron, lead – rubber	2	2	3	3	3
Curtain, window fire retardant, pair [or venetian blinds]	1	1	1	1	1
Gloves, lead – rubber, pair	1	1	1	2	2
Lead-rubber cassette masking, allocation	1	1	2	1	1
Marker, film set	1	1	2	1	1
Measure, tape 1800mm	1	1	2	1	1
Overlay foam, X-ray, with plastic cover	1	1	2	1	1
Pillow	2	2	4	2	2
Positioning aids, set	1	1	2	1	1
Rule, plastic, 450mm, graduated	1	1	2	1	1
Sandbag	4	4	8	4	4
Shield, gonad, set	1	1	2	1	1
Tray	–	–	2	1	1
Torch, rubber	–	–	–	1	1
Additional list					
Group 3					
ANGIOGRAPHIC ACCESSORIES [if justified]	–	–	–	1 (AngB)	–
CAMERA, 100mm (or equivalent) [if justified]	–	–	–	1	–
FILM-CHANGER, RAPID, MOBILE, FILM PROGRAMME SELECTOR AND KV REDUCTION UNIT [if justified]	–	–	–	1	–
SYRINGE INJECTOR, AUTOMATIC	–	–	–	1	–
PAN-TOMOGRAPHIC DENTAL UNIT [if justified]	1 (DenB)	–	–	–	–
TABLE, FLUOROSCOPIC [In lieu of FIB]	–	–	–	1 (FID)	–

26.5.5 Six-room department

	Room 1	Room 2	Room 3	Room 4	Room 5	Room 6
	Rad with Tom	Rad	Tom and Rad	IVU	Main Fl	2nd Fl
Basic List						
Group 1						
Basin, medium, no plug	1	1	1	1	1	1
Clock, with sweep second hand	1	1	1	1	1	1
Cupboard with 2 shelves, melamine faced [700 × 1200 × 500 mm under worktop]	2	2	2	2	2	2
Departmental intercom	1	1	1	1	1	1
Dimmer [for room lights]	1	1	1	1	1	1
Fused spur unit, 13A, switched, indicating	1	1	1	1	1	1
Hook, hat and coat, 2	2	2	2	2	2	2
Mains isolator, with easy action lever [for X-ray equipment]	1	1	1	1	1	1
Panel display, wall mounted [800 × 600 mm]	1	1	1	1	1	1
Patient/staff call push reassurance lamp and reset unit	1	1	1	1	1	1
Plinth [for cupboard]	2	2	2	2	2	2
Radiation warning light [to be provided at each entry]	1	1	1	1	1	1
Shelves 2, melamine faced	2	2	2	2	2	2
Socket outlet, 13A, switched, double	4	4	4	4	4	4
Taps, mixer, wall mounted, elbow action, H and drinking	1 pr	1 pr	1 pr	1 pr	1pr	1 pr
Track, window curtain [or venetian blinds]	1	1	1	1	1	1
Whiteboard, wall mounted [800 × 600 mm]	1	1	1	1	1	1
Worktop, melamine faced [1200 × 600 mm]	2	2	2	2	2	2
RACK, PROTECTIVE APRON, FOUR, WALL-MOUNTED	1	1	1	1	1	1
FITMENT, PEGS, WALL MOUNTED, TWO PAIR LEAD RUBBER GLOVES	1	1	1	1	1	1
FITMENT, RAIL, GONAD SHIELD, WALL MOUNTED	1	1	1	1	1	1
SCREEN, HINGED OR CUBICLE, PROTECTIVE WITH VIEWING WINDOW	1	1	1	1	1	1
SCREEN, PROTECTIVE, WITH 2 NO. FOLDING END SECTIONS	–	–	–	1	–	–
Group 2						
Dispenser, paper cup	1	1	1	1	1	1
Dispenser, paper towel [BS 1439]	1	1	1	1	1	1
Dispenser, soap	1	1	1	1	1	1
ILLUMINATOR, X-RAY FILM, DOUBLE WALL MOUNTED [with spot light facility]	1	1	1	1	1	1
Group 3						
BOX, CASSETTE STORAGE, MOBILE	1	1	1	1	1	1
CABLE, HV, X-RAY TUBE, PAIR [*Only one if integrated tube table]	1	2	2	2	2*	2
CABLES, HV, SUPPORT	1	2	2	2	2*	2
CASSETTE HOLDER, LATERAL	–	1	–	–	1	–
CHAMBER, IONISATION	2	2	2	2	1	1
CHAIR, PATIENT'S, FOR DENTAL RADIOGRAPHY [May be located in Dental Department]	1	–	–	–	–	–
CONE	1	1	–	–	–	–
CONTROL UNIT, AUTOMATIC BRIGHTNESS	–	–	–	–	1	1
DENTAL X-RAY UNIT, INTRA ORAL [May be located in Dental Department]	1 (DenA)	–	–	–	–	–

	Room 1	Room 2	Room 3	Room 4	Room 5	Room 6
	Rad with Tom	Rad	Tom and Rad	IVU	Main Fl	2nd Fl

26.5.5 Six-room department (continued)

Basic List
Group 3 (continued)

GENERATOR, HV, WITH STATOR CONTROL AND AUTOMATIC EXPOSURE CONTROL	1 (GenC)	1 (GenC)	1 (GenC)	1 (GenC)	1 (GenC)	1 (GenC)
IMAGE INTENSIFIER WITH CCTV SYSTEM [Dual field. With suspension if necessary]	–	–	–	–	1	1
MARKER, X-RAY FILM, DAYLIGHT	1	1	1	1	1	1
MONITOR, TV, SMALL	–	–	–	–	1	1
PAN–TOMOGRAPHIC DENTAL UNIT	1 (DenB)	–	–	–	–	–
RADIOLOGICAL EQUIPMENT INTERFACE ALLOC-FLUOROGRAPHIC	–	–	–	–	1	1
RADIOLOGICAL EQUIPMENT INTERFACE ALLOC-RADIOGRAPHIC	1	1	1	2	–	–
SKULL, X-RAY UNIT	–	1 (SkA)	–	–	–	–
STAND/CHEST/, VERTICAL, WITH CASSETTE HOLDER FOR FRONT FACE [With compression band)]	1 (ChC)	1 (ChB)	1 (ChA)	1 (ChA)	–	1 (ChA)
TABLE, FLUOROSCOPIC [With patient support and immobilisation device]	–	–	–	–	1 (FlB)	1 (FlB)
TABLE, RADIOGRAPHIC, WITH CASSETTE HOLDER, LATERAL [With compression band]	1 (RtC)	1 (RtB)	1 (RtA)	2 (RtB)	–	–
TOMOGRAPHIC ATTACHMENT	1 (TomA)	–	–	2 (TomA)	–	–
TOMOGRAPHIC UNIT	–	–	1 (TomC)	–	–	–
TUBE, X-RAY, HIGH SPEED [*Only one if integrated tube table	1	2	2	2	2*	2
TUBE, X-RAY, SUPPORT [With floor or ceiling tracks as appropriate. *Not required if integrated tube tables]	1 (TsB)	1 (TsB)	1 (TsB)	2 (TsA)	1* (TsB)	1 (TSB)
TROLLEY X-RAY, TRANSLUCENT TOP, WITH BRAKES	–	1	–	–	–	–
WARNING LIGHT, TUBE SELECTION	–	2	2	2	–	–
Chair, upright, stacking	2	2	2	2	3	3
Holder, sack, medium, free standing	1	1	1	1	1	1
Steps, couch mounting	1	1	2	2	1	1
Trolley, dressing/instrument s.s, buffered [450 × 450mm]	1	1	1	1	1	1
Group 4						
Apron, lead-rubber	2	2	2	3	3	3
Curtain, window, fire retardant, pair [or venetian blinds]	1	1	1	1	1	1
Gloves, lead-rubber, pair	1	1	1	1	2	2
Lead-rubber cassette masking allocation	1	1	1	2	1	1
Marker, film set	1	1	1	2	1	1
Measure, tape, 1800mm	1	1	1	2	1	1
Overlay foam, X-ray, with plastic cover	1	1	2	2	1	1
Pillow	2	2	2	4	2	2
Positioning aids, set	1	1	1	2	1	1
Rule, plastic, 450mm, graduated	1	1	1	2	1	1
Sandbag	4	4	4	8	4	4
Shield, gonad, set	1	1	1	2	1	1
Tray	–	–	–	2	1	1
Torch, rubber	–	–	–	–	1	1

	Room 1	Room 2	Room 3	Room 4	Room 5	Room 6
	Rad with Tom	Rad	Tom and Rad	IVU	Main Fl	2nd Fl

26.5.5 Six-room department (continued)

Additional List:

Group 3						
TABLE, FLUOROSCOPIC [In lieu of Fl B. *Only if justified on myelography work-load]	–	–	–	–	1 (FID) or 1* (FIC) or 1 (FIE)	–
CAMERA, 100mm (or equivalent) [If justified]	–	–	–	–	1	–
ANGIOGRAPHIC ACCESSORIES [If justified]	–	–	–	–	1 (AngB)	–
FILM CHANGER, RAPID, ON MOBILE BI-PLANE STAND, FILM-PROGRAMME SELECTOR AND KV REDUCTION UNIT [If justified]	–	–	–	–	1	–
SYRINGE, INJECTOR, AUTOMATIC [if justified]	–	–	–	–	1	–
MAMMOGRAPHIC UNIT [If justified]	–	1 (mamB)	–	–	–	–

	Room 1	Room 2	Room 3	Room 4	Room 5	Room 6	Room 7
	Chest Rad	Rad	Rad	Tom and Rad	IVU	Main Fl	2nd Fl

26.5.6 Seven-room department

Basic List							
Group 1							
Basin, medium, no plug	1	1	1	1	1	1	1
Clock, with sweep second hand	1	1	1	1	1	1	1
Cupboard with 2 shelves, melamine faced [700 × 1200 × 500mm under worktop]	2	2	2	2	2	2	2
Departmental intercom	1	1	1	1	1	1	1
Dimmer [for room lights]	1	1	1	1	1	1	1
Fused spur unit, 13A, switched, indicating	1	1	1	1	1	1	1
Isolator, 15A, SP&N	–	1	–	–	–	–	–
Isolator, 30A, SP&N	–	1	–	–	–	–	–
Mains isolator, with easy action lever [for X-ray equipment]	1	1	1	1	1	1	1

26.5.6 Seven-room department (continued)

	Room 1	Room 2	Room 3	Room 4	Room 5	Room 6	Room 7
	Chest Rad	Rad	Rad	Tom and Rad	IVU	Main Fl	2nd Fl
Basic List							
Group 1 (continued)							
Panel display, wall mounted [800 × 600mm]	1	1	1	1	1	1	1
Patient/staff, call push reassurance lamp and reset unit	1	1	1	1	1	1	1
Plinth [for cupboard]	2	2	2	2	2	2	2
Radiation warning light [to be provided at each entry]	1	1	1	1	1	1	1
Shelves 2, melamine faced [1200 × 600mm]	2	2	2	2	2	2	2
Socket outlet, 13A, switched, double	4	4	4	4	4	4	4
Taps, mixer, wall mounted, elbow action H and drinking	1 pr	1 pr	1 pr	1 pr	1 pr	1 pr	1 pr
Track, window, curtain [or venetian blinds]	1	1	1	1	1	1	1
Whiteboard, wall mounted [800 × 600mm]	1	1	1	1	1	1	1
Worktop, melamine faced [1200 × 600mm]	2	2	2	2	2	2	2
RACK, PROTECTIVE APRON, FOUR, WALL MOUNTED	1	1	1	1	1	1	1
FITMENT, PEGS, LEAD-RUBBER GLOVES, TWO PAIR, WALL MOUNTED	1	1	1	1	1	1	1
FITMENT, RAIL, GONAD SHIELD, WALL MOUNTED	1	1	1	1	1	1	1
SCREEN, HINGED OR CUBICLE, PROTECTIVE WITH VIEWING WINDOW	1	1	1	1	1	1	1
SCREEN, PROTECTIVE, WITH 2 NO. FOLDING END SECTIONS	–	–	–	–	1	–	–
Group 2							
Dispenser, paper cup	1	1	1	1	1	1	1
Dispenser, paper towel [BS 1439]	1	1	1	1	1	1	1
Dispenser, soap	1	1	1	1	1	1	1
ILLUMINATOR X-RAY FILM, DOUBLE, WALL MOUNTED [with spot light facility]	1	1	1	1	1	1	1
Group 3							
BOX, CASSETTE, STORAGE, MOBILE	1	1	1	1	1	1	1
CABLES, HV, X-RAY TUBE, PAIR	1	1	2	2	2	2	2
CABLES, HV, SUPPORT	1	1	2	2	2	2	2
CASSETTE HOLDER, LATERAL	–	1	1	–	–	1	–
CHAMBER, IONISATION	1	2	2	2	2	1	1
CHAIR, PATIENT'S, FOR DENTAL RADIOGRAPHY [may be located in Dental Department]	–	1	–	–	–	–	–
CHEST, X-RAY UNIT, AUTOMATED, CASSETTELESS	1 (ChF)	–	–	–	–	–	–
CONE [Extra as required]	–	1	1	–	–	–	–
CONTROL UNIT, AUTOMATIC BRIGHTNESS	–	–	–	–	–	1	1
DENTAL X-RAY UNIT, INTRA ORAL [may be located in Dental Department]	–	1 (DenA)	–	–	–	–	–
GENERATOR, HV, WITH STATOR CONTROL AND AUTOMATIC EXPOSURE CONTROL	1 (GenC)	1 (GenC)	1 (GenC)	1 (GenC)	1 (GenC)	1 (GenC)	1 (GenC)
IMAGE INTENSIFIER WITH CCTV SYSTEM [Dual field. With suspension if necessary]	–	–	–	–	–	1	1
MARKER, X-RAY FILM, DAYLIGHT	1	1	1	1	1	1	1
MONITOR, TV, SMALL	–	–	–	–	–	1	1
PAN-TOMOGRAPHIC DENTAL UNIT [may be located in Dental Department]	–	1 (DenB)	–	–	–	–	–

	Room 1	Room 2	Room 3	Room 4	Room 5	Room 6	Room 7
	Chest Rad	Rad	Rad	Tom and Rad	IVU	Main Fl	2nd Fl

26.5.6 Seven-room department (continued)

Basic List
Group 3 (continued)

PROCESSOR, AUTOMATIC [Attached to automatic chest unit]	1 (ProcB)	–	–	–	–	–	–
RADIOLOGICAL EQUIPMENT INTERFACE ALLOCATION – FLUOROGRAPHIC	–	–	–	–	–	1	1
RADIOLOGICAL EQUIPMENT INTERFACE ALLOCATION – RADIODIAGNOSTIC	1	1	1	1	2	–	–
SKULL, X-RAY UNIT	–	–	1 (SkA)	–	–	–	–
STAND/CHEST, VERTICAL, WITH CASSETTE FOR FRONT FACE [with compression band]	–	1 (ChC)	1 (ChB)	1 (ChA)	–	–	–
TABLE, FLUOROSCOPIC [with patient support and immobilisation devices]	–	–	–	–	–	1 (FlB)	1 (FlB)
TABLE, RADIOGRAPHIC, WITH CASSETTE HOLDER LATERAL	–	1 (RtC)	1 (RtB)	1 (RtA)	2 (RtB)	–	–
TOMOGRAPHIC ATTACHMENT	–	–	–	–	2 (TomA)	–	–
TOMOGRAPHIC UNIT	–	–	–	1 (TomC)	–	–	–
TUBE, X-RAY, HIGH SPEED	1	1	2	2	2	2	2
TUBE, X-RAY, SUPPORT [with floor or ceiling tracks as appropriate. *May be integral with automated chest unit]	1* (TsB)	1 (TsB)	1 (TsB)	1 (TsB)	2 (TsA)	1 (TsB)	1 (TsB)
TROLLEY, X-RAY TRANSLUCENT TOP WITH BRAKES	–	–	1	–	–	–	–
WARNING LIGHT, TUBE SELECTION	–	–	2	2	2	–	–
Chair, upright stacking	2	2	2	2	2	3	3
Holder, sack, medium, freestanding	1	1	1	1	1	1	1
Steps, couch mounting	–	1	1	2	2	1	1
Trolley, dressing/instrument, s.s., buffered	1	1	1	1	1	1	1
Group 4							
Apron, lead-rubber	2	2	2	2	3	3	3
Curtain, window, fire retardant, pair	1	1	1	1	1	1	1
Gloves, lead-rubber, pair	1	1	1	1	1	2	2
Lead-rubber cassette masking, allocation	1	1	1	1	2	1	1
Marker, film, set	1	1	1	1	2	1	1
Measure, tape, 1800mm	1	1	1	1	2	1	1
Overlay foam, X-ray, with plastic cover	–	1	1	2	2	1	1
Pillow	–	2	2	2	4	2	2
Positioning aids, set	1	1	1	1	2	1	1
Rule, plastic, 450mm graduated	1	1	1	1	2	1	1
Sandbag	4	4	4	4	8	4	4
Shield, gonad, set	1	1	1	1	2	1	1
Tray	–	–	–	–	2	1	1
Torch, rubber	–	–	–	–	–	1	1

Additional List
Group 3

ANGIOGRAPHIC ACCESSORIES[If justified]	–	–	–	–	–	1 (AngB)	–
CAMERA, 100mm (or equivalent) [If justified]	–	–	–	–	–	1	–
MAMMOGRAPHIC UNIT [If justified]	–	–	1 (MamB)	–	–	–	–

	Room 1	Room 2	Room 3	Room 4	Room 5	Room 6	Room 7
	Chest Rad	Rad	Rad	Tom and Rad	IVU	Main Fl	2nd Fl

26.5.6 Seven-room department (continued)

Additional List							
Group 3 (continued)							
FILM CHANGER RAPID ON MOBILE BI-PLANE STAND, FILM PROGRAMME SELECTOR AND KV REDUCTION UNIT [If justified]	–	–	–	–	–	1	–
SYRINGE, INJECTOR, AUTOMATIC [If justified]	–	–	–	–	–	1	–
TABLE, FLUOROSCOPIC [In lieu of FIB *only if justified on myelography work-load]	–	–	–	–	–	1 (FID) or 1 (FIC)* or 1 (FIE)*	–

	Room 1	Room 2	Room 3	Room 4	Room 5	Room 6	Room 7	Room 8
	Chest Rad	Rad	Rad	Tom and Rad	IVU	Main Fl	2nd Fl	Ang

26.5.7 Eight-room department

Basic List								
Group 1								
Basin, medium, no plug	1	1	1	1	1	1	1	1
Clip equipment, 12, wall mounted	–	–	–	–	–	–	–	1
Clock, with sweep second hand	1	1	1	1	1	1	1	1
Cupboard with 2 shelves, melamine faced [700 × 1200 × 500mm under worktop]	2	2	2	2	2	2	2	2
Departmental intercom	1	1	1	1	1	1	1	1
Dimmer [for room lights]	1	1	1	1	1	1	1	1
Fused spur unit, 13A, switched, indicating	1	1	1	1	1	1	1	1
Hook, hat and coat, 2	2	2	2	2	2	2	2	2
Isolator, 15A, SP&N	1	–	–	–	–	–	–	–
Isolator, 30A, SP&N	1	–	–	–	–	–	–	–
Mains isolator, with easy action lever [for X-ray equipment]	1	1	1	1	1	1	1	1
Panel display, wall mounted [800 × 600mm]	1	1	1	1	1	1	1	1
Patient/staff, call push reassurance lamp and reset unit	1	1	1	1	1	1	1	1
Plinth [for cupboard]	2	2	2	2	2	2	2	2
Radiation warning light [to be provided at each entry]	1	1	1	1	1	1	1	1
Shelves 2, melamine faced [1200 × 600mm]	2	2	2	2	2	2	2	2
Socket outlet, 13A, switched double	4	4	4	4	4	4	4	4

	Room 1	Room 2	Room 3	Room 4	Room 5	Room 6	Room 7	Room 8
	Chest Rad	Rad	Rad	Tom and Rad	IVU	Main Fl	2nd Fl	Ang

26.5.7 Eight-room department (continued)

Basic List
Group 1 (continued)

Tap, mixer, wall mounted, elbow action H and drinking	1 pr	1 pr	1 pr	1 pr	1 pr	1 pr	1 pr	1 pr
Track, window, curtain [or venetian blinds]	1	1	1	1	1	1	1	1
Whiteboard, wall mounted [800 × 600mm]	1	1	1	1	1	1	1	1
Worktop, melamine faced [1200 × 600mm]	2	2	2	2	2	2	2	2
RACK, PROTECTIVE APRON, FOUR, WALL MOUNTED	1	1	1	1	1	1	1	1
FITMENT, PEGS, LEAD-RUBBER GLOVES, TWO PAIR, WALL MOUNTED	1	1	1	1	1	1	1	1
FITMENT, RAIL FOR GONAD SHIELD, WALL MOUNTED	1	1	1	1	1	1	1	1
SCREEN, HINGED OR CUBICLE, PROTECTIVE WITH VIEWING WINDOW	1	1	1	1	1	1	1	1
SCREEN, PROTECTIVE, WITH 2 NO. FOLDING END SECTIONS	–	–	–	–	1	–	–	–

Group 2

Dispenser, paper cup	1	1	1	1	1	1	1	1
Dispenser, paper towel [BS 1439]	1	1	1	1	1	1	1	1
Dispenser, soap	1	1	1	1	1	1	1	1
ILLUMINATOR, X-RAY FILM, DOUBLE, WALL MOUNTED [with spot light facility]	1	1	1	1	1	1	1	2

Group 3

ANGIOGRAPHIC FLUOROGRAPHIC TABLE WITH TABLE TOP STEPPING UNIT, KV REDUCTION UNIT, FILM CHANGER RAPID AND FILM PROGRAMME SELECTOR	–	–	–	–	–	–	–	1 (AngC)
BOX, CASSETTE, STORAGE, MOBILE	1	1	1	1	1	1	1	1
CABLES, HV, X-RAY TUBE, PAIR	1	1	2	2	2	2	2	1
CABLES, HV, SUPPORT	1	1	2	2	2	2	2	1
CASSETTE HOLDER, LATERAL	–	–	1	–	–	1	–	–
CHAMBER, IONISATION	1	2	2	2	2	1	1	2
CHAIR, PATIENT'S, FOR DENTAL RADIOGRAPHY [may be in Dental Department]	–	1	–	–	–	–	–	–
CHEST, X-RAY UNIT, AUTOMATED, CASSETTELESS	1 (ChF)	–	–	–	–	–	–	–
CONE [may be in Dental Department. Extra as required]	–	1	1	–	–	–	–	–
CONTROL UNIT, AUTOMATIC BRIGHTNESS	–	–	–	–	–	1	1	1
DENTAL X-RAY UNIT, INTRA ORAL [may be located in Dental Department]	–	1 (DenA)	–	–	–	–	–	–
GENERATOR, HV, WITH STATOR CONTROL AND AUTOMATIC EXPOSURE CONTROL	1 (GenC)	1 (GenC)	1 (GenC)	1 (GenC)	1 (GenC)	1 (GenC)	1 (GenC)	1 (GenD)
IMAGE INTENSIFIER WITH CCTV SYSTEM [Dual field. With suspension if necessary]	–	–	–	–	–	1	1	1
MARKER, X-RAY FILM, DAYLIGHT	1	1	1	1	1	1	1	1
MONITOR, TV, SMALL	–	–	–	–	–	1	–	–
PAN-TOMOGRAPHIC DENTAL UNIT [may be in Dental Department]	–	1 (DenB)	–	–	–	–	–	–
PROCESSOR, AUTOMATIC [Attached to automatic chest unit]	1 (ProcB)	–	–	–	–	–	–	–

	Room 1	Room 2	Room 3	Room 4	Room 5	Room 6	Room 7	Room 8
	Chest Rad	Rad	Rad	Tom and Rad	IVU	Main Fl	2nd Fl	Ang

26.5.7 Eight-room department (continued)

Basic List
Group 3 (continued)

RADIOLOGICAL EQUIPMENT INTERFACE ALLOC – FLUOROGRAPHIC	–	–	–	–	–	1	1	1
RADIOLOGICAL EQUIPMENT INTERFACE ALLOC – RADIOGRAPHIC	1	1	1	1	2	–	–	–
RECORDER, VIDEO TAPE	–	–	–	–	–	1	–	–
SKULL, X-RAY UNIT	–	–	1 (SkA)	–	–	–	–	–
STAND/CHEST, VERTICAL WITH CASSETTE FOR FRONT FACE [with compression band]	–	1 (ChB)	1 (ChB)	1 (ChA)	–	–	–	–
SYRINGE, INJECTOR, AUTOMATIC	–	–	–	–	–	–	–	1
TABLE, FLUOROSCOPIC [with patient support and immobilisation devices]	–	–	–	–	–	1 (FlB)	1 (FlB)	–
TABLE, RADIOGRAPHIC, WITH CASSETTE HOLDER LATERAL	–	1 (RtB)	1 (RtB)	1 (RtA)	2 (RtB)	–	–	–
TOMOGRAPHIC ATTACHMENT	–	–	–	–	2 (TomA)	–	–	–
TOMOGRAPHIC UNIT	–	–	–	1 (TomC)	–	–	–	–
TROLLEY, X-RAY, TRANSLUCENT TOP, WITH BRAKES	–	–	1	–	–	–	–	–
TUBE, X-RAY, HIGH SPEED	1	1	2	2	2	2	2	1
TUBE, X-RAY, SUPPORT [with floor or ceiling tracks as appropriate *may be integral with automatic chest unit]	1* (TsB)	1 (TsB)	1 (TsB)	1 (TsB)	2 (TsA)	1 (TsB)	1 (TsB)	–
WARNING LIGHT, TUBE SELECTION	–	–	2	2	2	–	–	–
Chair, upright, stacking	2	2	2	2	2	3	3	3
Holder, sack, medium, freestanding	1	1	1	1	1	1	1	1
Steps, couch mounting	–	1	1	2	2	1	1	1
Trolley, dressing/instrument, s.s., buffered [450 × 450mm]	1	1	1	1	1	1	1	1
Trolley, video tape recorder	–	–	–	–	–	1	–	–

Group 4

Apron, lead-rubber	2	2	2	2	3	3	3	3
Curtain, window, fire retardant, pair [or venetian blinds]	1	1	1	1	1	1	1	1
Gloves, lead-rubber, pair	1	1	1	1	1	2	2	2
Lead-rubber cassette masking, allocation	1	1	1	1	2	1	1	1
Marker, film, set	1	1	1	1	2	1	1	1
Measure, tape, 1800mm	1	1	1	1	2	1	1	1
Overlay foam, X-ray, with plastic cover	–	1	1	2	2	1	1	1
Pillow	–	2	2	2	4	2	2	2
Positioning aids, set	1	1	1	1	2	1	1	1
Rule, plastic, 450mm graduated	1	1	1	1	2	1	1	1
Sandbag	4	4	4	4	8	4	4	4
Shield, gonad, set	1	1	1	1	2	1	1	1
Torch, rubber	–	–	–	–	–	1	1	1
Tray	–	–	–	–	2	1	1	1

	Room 1	Room 2	Room 3	Room 4	Room 5	Room 6	Room 7	Room 8
	Chest Rad	Rad	Rad	Tom and Rad	IVU	Main Fl	2nd Fl	Ang

26.5.7 Eight-room department (continued)

Additional List								
Group 3								
TABLE, FLUOROSCOPIC [In lieu of FIB *Only if justified on myelography work-load]	–	–	–	–	–	1 (FID) or 1 (FIC)* or 1 (FIE)	–	–
CAMERA, 100mm (or equivalent) [If justified]	–	–	–	–	–	1	–	–
MAMMOGRAPHIC UNIT [If justified]	–	1 (MamB)	–	–	–	–	–	–

	Room 1	Room 2	Room 3	Room 4	Room 5	Room 6	Room 7	Room 8	Room 9
	Chest Rad	Rad	Rad	Rad	Tom and Rad	IVU	Main Fl	2nd Fl	Ang

26.5.8 Nine-room department

Basic List									
Group 1									
Basin, medium, no plug	1	1	1	1	1	1	1	1	1
Clip equipment, 12 wall mounted	–	–	–	–	–	–	–	–	1
Clock, with sweep second hand	1	1	1	1	1	1	1	1	1
Cupboard, with 2 shelves, melamine faced [700 × 1200 × 500mm under worktop]	2	2	2	2	2	2	2	2	2
Departmental intercom	1	1	1	1	1	1	1	1	1
Dimmer [for room lights]	1	1	1	1	1	1	1	1	1
Fused spur unit, 13A, switched, indicating	1	1	1	1	1	1	1	1	1
Hook, hat and coat, 2	2	2	2	2	2	2	2	2	2
Isolator, 15A, SP&N	1	–	–	–	–	–	–	–	–
Isolator, 30A, SP&N	1	–	–	–	–	–	–	–	–
Mains isolator, with easy action lever [for X-ray equipment	1	1	1	1	1	1	1	1	1
Panel display 800 × 600mm	1	1	1	1	1	1	1	1	1
Patient/staff call push reassurance lamp and reset unit	1	1	1	1	1	1	1	1	1
Plinth [for cupboard]	2	2	2	-2	2	2	2	2	2
Radiation warning light [to be provided at each entry point]	1	1	1	1	1	1	1	1	1
Shelves, 2, melamine faced [1200 × 600mm]	2	2	2	2	2	2	2	2	2
Socket outlet, 13A, switched, double	4	4	4	4	4	4	4	4	4
Taps, mixer, wall mounted, elbow action, H and drinking	1 pr	1 pr	1 pr	1 pr	1 pr	1 pr	1 pr	1 pr	1 pr

	Room 1	Room 2	Room 3	Room 4	Room 5	Room 6	Room 7	Room 8	Room 9
	Chest Rad	Rad	Rad	Rad	Tom and Rad	IVU	Main Fl	2nd Fl	Ang

26.5.8 Nine-room department (continued)

Basic List
Group 1 (continued)

Track, window curtain [or venetian blinds]	1	1	1	1	1	1	1	1	1
Whiteboard, wall mounted [800 × 600mm]	1	1	1	1	1	1	1	1	1
Worktop, melamine faced [1200 × 600mm]	1	1	1	1	1	1	1	1	1
RACK, PROTECTIVE APRON, FOUR, WALL MOUNTED	1	1	1	1	1	1	1	1	1
FITMENT, PEGS, LEAD-RUBBER GLOVES, TWO PAIR, WALL MOUNTED	1	1	1	1	1	1	1	1	1
FITMENT, RAIL GONAD SHIELD, WALL MOUNTED	1	1	1	1	1	1	1	1	1
SCREEN, HINGED OR CUBICLE, PROTECTIVE WITH VIEWING WINDOW	1	1	1	1	1	1	1	1	1
SCREEN, PROTECTIVE, WITH 2 NO. FOLDING SECTION ENDS	–	–	–	–	–	1	–	–	–
Group 2									
Dispenser, paper cup	1	1	1	1	1	1	1	1	1
Dispenser, paper towel [BS 1439]	1	1	1	1	1	1	1	1	1
Dispenser, soap	1	1	1	1	1	1	1	1	1
ILLUMINATOR, X-RAY FILM, DOUBLE, WALL MOUNTED [with spot light facility]	1	1	1	1	1	1	1	1	2
Group 3									
ANGIOGRAPHIC FLUOROGRAPHIC TABLE WITH TABLE TOP STEPPING UNIT, Kv REDUCTION UNIT, FILM CHANGER RAPID AND FILM PROGRAMME SELECTOR	–	–	–	–	–	–	–	–	1 (AngC)
BOX, CASSETTE STORAGE, MOBILE	1	1	1	1	1	1	1	1	1
CABLES, HV, X-RAY TUBE, PAIRS	1	1	1	2	2	2	2	2	1
CABLES, HV, SUPPORT	1	1	1	2	2	2	2	2	1
CASSETTE HOLDER, LATERAL	–	–	–	1	–	–	1	–	–
CHAMBER, IONISATION	1	2	2	2	2	2	1	1	2
CHAIR, PATIENT'S, FOR DENTAL RADIOGRAPHY [may be located in Dental Department]	–	–	1	–	–	–	–	–	–
CHEST X-RAY UNIT, AUTOMATED, CASSETTELESS	1(ChF)	–	–	–	–	–	–	–	–
CONE	–	–	1	1	–	–	–	–	–
CONTROL UNIT, AUTOMATIC BRIGHTNESS	–	–	–	–	–	–	1	1	1
DENTAL X-RAY UNIT, INTRA ORAL [may be located in Dental Department]	–	–	1 (DenA)	–	–	–	–	–	–
GENERATOR, HV, WITH STATOR CONTROL AND AUTOMATIC EXPOSURE CONTROL	1 (GenC)	1 (GenC)	1 (GenC)	1 (GenC)	1 (GenC)	1 (GenC)	1 (GenC)	1 (GenC)	1 (GenD)
IMAGE INTENSIFIER WITH CCTV SYSTEM [Dual field with suspension if necessary]	–	–	–	–	–	–	1	1	1
MARKER, X-RAY FILM, DAYLIGHT	1	1	1	1	1	1	1	1	1
MONITOR, TV, SMALL	–	–	–	–	–	–	1	1	1
PAEDIATRIC ACCESSORIES	–	–	–	–	–	–	–	1 (PaedB)	–
PAN-TOMOGRAPHIC DENTAL UNIT	–	–	1 (DenB)	–	–	–	–	–	–

26.5.8 Nine-room department (continued)

	Room 1	Room 2	Room 3	Room 4	Room 5	Room 6	Room 7	Room 8	Room 9
	Chest Rad	Rad	Rad	Rad	Tom and Rad	IVU	Main Fl	2nd Fl	Ang
Basic List									
Group 3 (continued)									
PROCESSOR, AUTOMATIC [attached to automatic chest unit]	1 (ProcB)	–	–	–	–	–	–	–	–
RADIOLOGICAL EQUIPMENT INTERFACE ALLOC – FLUOROGRAPHIC	–	–	–	–	–	–	1	1	1
RADIOLOGICAL EQUIPMENT INTERFACE ALLOC – RADIOGRAPHIC	1	1	1	1	1	2	–	–	–
RECORDER, VIDEO TAPE	1	–	–	–	–	–	1	–	–
SKULL X-RAY UNIT	–	–	–	1(SkA)	–	–	–	–	–
STAND/CHEST, VERTICAL WITH CASSETTE FOR FRONT FACE	–	1(ChC)	1(ChB)	1(ChB)	1(ChA)	–	–	–	–
SYRINGE INJECTOR AUTOMATIC	–	–	–	–	–	–	–	–	1
TABLE, FLUOROSCOPIC [with patient support and immobilisation devices]	–	–	–	–	–	–	1(FlB)	1(FlB)	–
TABLE, RADIOGRAPHIC, WITH CASSETTE HOLDER LATERAL [with compression band]	–	1(RtC)	1(RtB)	1(RtB)	1(RtA)	2(RtB)	–	–	–
TOMOGRAPHIC ATTACHMENT	–	–	–	–	–	2 (TomA)	–	–	–
TOMOGRAPHIC UNIT	–	–	–	–	1 (TomC)	–	–	–	–
TROLLEY X-RAY TRANSLUCENT TOP WITH BRAKES	–	–	–	1	–	–	–	–	–
TUBE, X-RAY, HIGH SPEED	1	1	1	2	2	2	2	2	1
TUBE, X-RAY, SUPPORT [*May be integral with automated chest unit. With floor or ceiling tracks as appropriate]	1(TsB)*	1(TsB)	1(TsB)	1(TsB)	1(TsB)	2(TsA)	1(TsB)	1(TsB)	–
WARNING LIGHT, TUBE SELECTION	–	–	–	2	2	2	–	–	–
Chair, upright, stacking	2	2	2	2	2	2	3	3	3
Holder, sack, medium	1	1	1	1	1	1	1	1	1
Steps, couch mounting	–	1	1	1	2	2	1	1	1
Trolley, dressing/instrument, s.s., buffered 450 × 450 mm	1	1	1	1	1	1	1	1	1
Trolley, video tape recorder	–	–	–	–	–	–	1	–	–
Group 4									
Apron, lead-rubber	2	2	2	2	2	3	3	3	3
Curtain, window, fire retardant, pair [or venetian blinds]	1	1	1	1	1	1	1	1	1
Gloves, lead-rubber, pair	1	1	1	1	1	1	2	2	2
Lead-rubber cassette masking, allocation	1	1	1	1	1	2	1	1	1
Marker, film, set	1	1	1	1	1	2	1	1	1
Measure, tape, 1800 mm	1	1	1	1	1	2	1	1	1
Overlay, foam, X-Ray, with plastic cover	–	1	1	1	2	2	1	1	1
Pillow	–	2	2	2	2	4	2	2	2
Positioning aids, set	1	1	1	1	1	2	1	1	1
Rule, plastic, 450 mm, graduated	1	1	1	1	1	2	1	1	1
Sandbag	4	4	4	4	4	8	4	4	4
Shield, gonad, set	1	1	1	1	1	2	1	1	1
Tray	–	–	–	–	–	2	1	1	1
Torch, rubber	–	–	–	–	–	–	1	1	1

	Room 1	Room 2	Room 3	Room 4	Room 5	Room 6	Room 7	Room 8	Room 9
	Chest Rad	Rad	Rad	Rad	Tom and Rad	IVU	Main Fl	2nd Fl	Ang

26.5.8 Nine-room department (continued)

Additional List									
Group 3									
TABLE, FLUOROSCOPIC [In lieu of FIB *Only if justified on myelography work-load]	–	–	–	–	–	–	1(FID) or 1(FIC)* OR 1(FIE)*	–	–
CAMERA, 100mm (or equivalent) [If justified]	–	–	–	–	–	–	1	–	–
PAEDIATRIC CHEST UNIT [If justified]	1 (PaedA)	–	–	–	–	–	–	–	–
MAMMOGRAPHIC UNIT [If justified]	–	1 (MamB)	–	–	–	–	–	–	–

	Room 1	Room 2	Room 3	Room 4	Room 5	Room 6	Room 7	Room 8	Room 9	Room 10
	Chest Rad	Rad	Rad	Rad	Tom and Rad	IVU	Main Fl	2nd Fl	3rd Fl	Ang

26.5.9 Ten-room department

Basic List										
Group 1										
Basin, medium, no plug	1	1	1	1	1	1	1	1	1	1
Clip equipment, 12 wall mounted	–	–	–	–	–	–	–	–	–	1
Clock, with sweep second hand	1	1	1	1	1	1	1	1	1	1
Cupboard, with 2 shelves melamine faced [700 × 1200 × 500mm under worktop]	2	2	2	2	2	2	2	2	2	2
Departmental intercom	1	1	1	1	1	1	1	1	1	1
Dimmer [for room lights]	1	1	1	1	1	1	1	1	1	1
Fused spur unit, 13A, switched, indicating	1	1	1	1	1	1	1	1	1	1
Hook, hat and coat, 2	2	2	2	2	2	2	2	2	2	2
Isolator, 15A, SP&N	1	–	–	–	–	–	–	–	–	–
Isolator, 30A, SP&N	1	–	–	–	–	–	–	–	–	–
Mains isolator, with easy action lever [for X-ray equipment]	1	1	1	1	1	1	1	1	1	1
Panel display, wall mounted [800 × 600mm]	1	1	1	1	1	1	1	1	1	1
Patient/staff call push reassurance lamp and reset unit	1	1	1	1	1	1	1	1	1	1
Plinth [for cupboard]	2	2	2	2	2	2	2	2	2	2
Radiation warning light [to be provided at each entry point]	1	1	1	1	1	1	1	1	1	1
Shelves, 2, melamine faced [1200 × 600mm]	2	2	2	2	2	2	2	2	2	2
Socket outlet, 13A, switched, double	4	4	4	4	4	4	4	4	4	4
Taps, mixer, wall mounted, elbow action, H and drinking	1 pr	1 pr	1 pr	1 pr	1 pr	1 pr	1 pr	1 pr	1 pr	1 pr

	Room 1	Room 2	Room 3	Room 4	Room 5	Room 6	Room 7	Room 8	Room 9	Room 10
	Chest Rad	Rad	Rad	Rad	Tom and Rad	IVU	Main Fl	2nd Fl	3rd Fl	Ang
26.5.9 Ten-room department (continued)										
Basic List										
Group 1 (continued)										
Track, window curtain [or venetian blinds]	1	1	1	1	1	1	1	1	1	1
Whiteboard, wall mounted [800 × 600 mm]	1	1	1	1	1	1	1	1	1	1
Worktop, melamine faced [1200 × 600 mm]	2	2	2	2	2	2	2	2	2	2
RACK, PROTECTIVE APRON, FOUR, WALL MOUNTED	1	1	1	1	1	1	1	1	1	1
FITMENT, PEGS, LEAD-RUBBER GLOVES, TWO PAIR, WALL MOUNTED	1	1	1	1	1	1	1	1	1	1
FITMENT, RAIL FOR GONAD SHIELD, WALL MOUNTED	1	1	1	1	1	1	1	1	1	1
SCREEN, HINGED OR CUBICLE, PROTECTIVE WITH VIEWING WINDOW	1	1	1	1	1	1	1	1	1	1
SCREEN, PROTECTIVE, WITH 2 NO. FOLDING SECTION ENDS	–	–	–	–	–	1	–	–	–	–
Group 2										
Dispenser, paper cup	1	1	1	1	1	1	1	1	1	1
Dispenser, paper towel [BS 1439]	1	1	1	1	1	1	1	1	1	1
Dispenser, soap	1	1	1	1	1	1	1	1	1	1
ILLUMINATOR, X-RAY FILM, DOUBLE, WALL MOUNTED [with spot light facility]	1	1	1	1	1	1	1	1	1	2
Group 3										
ANGIOGRAPHIC FLUOROGRAPHIC TABLE WITH TABLE TOP STEPPING UNIT, Kv REDUCTION UNIT, FILM CHANGER RAPID AND FILM PROGRAMME SELECTOR	–	–	–	–	–	–	–	–	–	1 (AngC)
BOX, CASSETTE STORAGE, MOBILE	1	1	1	1	1	1	1	1	1	1
CABLES, HV, X-RAY TUBE, PAIRS	1	1	1	2	2	2	2	2	2	1
CABLES, HV, SUPPORT	1	1	1	2	2	2	2	2	2	1
CASSETTE HOLDER, LATERAL	–	–	–	1	–	–	1	–	–	–
CHAMBER, IONISATION	1	2	2	2	2	2	1	1	1	2
CHAIR, PATIENT'S, FOR DENTAL RADIOGRAPHY [may be located in Dental Department]	–	–	1	–	–	–	–	–	–	–
CHEST X-RAY UNIT, AUTOMATED, CASSETTELESS	1(ChF)	–	–	–	–	–	–	–	–	–
CONE	–	–	1	1	–	–	–	–	–	–
CONTROL UNIT, AUTOMATIC BRIGHTNESS	–	–	–	–	–	–	1	1	1	1
DENTAL X-RAY UNIT, INTRA ORAL [may be located in Dental Department	–	–	1 (DenA)	–	–	–	–	–	–	–
GENERATOR, HV, WITH STATOR CONTROL AND AUTOMATIC EXPOSURE CONTROL	1 (GenC)	1 (GenC)	1 (GenC)	1 (GenC)	1 (GenC)	1 (GenC)	1 (GenC)	1 (GenC)	1 (GenC)	1 (GenD)
IMAGE INTENSIFIER WITH CCTV SYSTEM [Dual field, *single field with suspension if necessary]	–	–	–	–	–	–	1	1	1*	1
MAMMOGRAPHIC UNIT	–	1 (MamB)	–	–	–	–	–	–	–	–
MARKER, X-RAY FILM, DAYLIGHT	1	1	1	1	1	1	1	1	1	1
MONITOR, TV, SMALL	–	–	–	–	–	–	1	1	1	1
PAEDIATRIC ACCESSORIES	–	–	–	–	–	–	–	1 (PaedB)	–	–
PAN-TOMOGRAPHIC DENTAL UNIT [may be located in Dental Department]	–	–	1 (DenB)	–	–	–	–	–	–	–

	Room 1	Room 2	Room 3	Room 4	Room 5	Room 6	Room 7	Room 8	Room 9	Room 10
	Chest Rad	Rad	Rad	Rad	Tom and Rad	IVU	Main Fl	2nd Fl	3rd Fl	Ang

26.5.9 Ten-room department (continued)

Basic List
Group 3 (continued)

PROCESSOR, AUTOMATIC [attached to automatic chest unit]	1 (ProcB)	–	–	–	–	–	–	–	–	–
RADIOLOGICAL EQUIPMENT INTERFACE ALLOC – FLUOROGRAPHIC	–	–	–	–	–	–	1	1	1	1
RADIOLOGICAL EQUIPMENT INTERFACE ALLOC – RADIOGRAPHIC	1	1	1	1	1	2	–	–	–	–
RECORDER, VIDEO TAPE	–	–	–	–	–	–	1	–	–	–
SKULL, X-RAY UNIT	–	–	–	1(SkA)	–	–	–	–	–	–
STAND/CHEST, VERTICAL WITH CASSETTE FOR FRONT FACE [with compression band]	–	1(ChC)	1(ChB)	1(ChB)	1(ChA)	–	–	–	–	–
SYRINGE INJECTOR, AUTOMATIC	–	–	–	–	–	–	–	–	–	1
TABLE, FLUOROSCOPIC [with patient support and immobilisation devices]	–	–	–	–	–	–	1(FlB)	1(FlB)	1(FlB)	–
TABLE, RADIOGRAPHIC, WITH CASSETTE HOLDER, LATERAL	–	1(RTC)	1(RTB)	1(RTB)	1(RTA)	2(RTB)	–	–	–	–
TOMOGRAPHIC ATTACHMENT	–	–	–	–	–	2 (TomA)	–	–	–	–
TOMOGRAPHIC UNIT	–	–	–	–	1 (TomC)	–	–	–	–	–
TROLLEY, X-RAY, WITH TRANSLUCENT TOP, WITH BRAKES	–	–	–	1	–	–	–	–	–	–
TUBE, X-RAY, HIGH SPEED	1	1	1	2	2	2	2	2	2	1
TUBE, X-RAY, SUPPORT [with floor or ceiling tracks as appropriate *may be integral with automated chest unit]	1 (TSB)*	1(TSB)	1(TSB)	1(TSB)	1(TSB)	2(TSA)	1(TSB)	1(TSB)	1(TSB)	–
WARNING LIGHT, TUBE SELECTION	–	–	–	2	2	2	–	–	–	–
Chair, upright, stacking	2	2	2	2	2	2	3	3	3	3
Holder, sack, medium	1	1	1	1	1	1	1	1	1	1
Steps, couch mounting	–	1	1	1	2	2	1	1	1	1
Trolley, dressing/instrument s.s. buffered	1	1	1	1	1	1	1	1	1	1
Trolley, video tape recorder	–	–	–	–	–	–	–	–	–	–

Group 4

Apron, lead-rubber	2	2	2	2	2	3	3	3	3	3
Curtain, window, fire retardant, pair [or venetian blind]	1	1	1	1	1	1	1	1	1	1
Gloves, lead-rubber pair	1	1	1	1	1	1	2	2	2	2
Lead-rubber cassette masking, allocation	1	1	1	1	1	1	1	1	1	1
Marker, film, set	1	1	1	1	1	1	1	1	1	1
Measure, tape, 1800mm	1	1	1	1	1	2	1	1	1	1
Overlay foam, X-Ray, with plastic cover	–	1	1	1	2	2	1	1	1	1
Pillow	–	2	2	2	2	4	2	2	2	2
Positioning aids, set	1	1	1	1	1	2	1	1	1	1
Rule, plastic, 450mm, graduated	1	1	1	1	1	2	1	1	1	1
Sandbag	4	4	4	4	4	8	4	4	4	4
Shield, gonad, set	1	1	1	1	1	2	1	1	1	1
Torch, rubber	–	–	–	–	–	–	1	1	1	1
Tray	–	–	–	–	–	2	1	1	1	1

	Room 1	Room 2	Room 3	Room 4	Room 5	Room 6	Room 7	Room 8	Room 9	Room 10
	Chest Rad	Rad	Rad	Rad	Tom and Rad	IVU	Main Fl	2nd Fl	3rd Fl	Ang

26.5.9 Ten-room department (continued)

Additional List										
Group 3										
TABLE FLUOROSCOPIC [In lieu of Fl B *Only if justified on myelography work-load]	–	–	–	–	–	–	1(FID) or 1(FIC)* or 1(FIE)*	–	–	–
CAMERA, 100mm (or equivalent) [If justified]	–	–	–	–	–	–	1	–	–	–
PAEDIATRIC CHEST UNIT [If justified]	1 (PaedA)	–	–	–	–	–	–	–	–	–

	Room 1	Room 2	Room 3	Room 4	Room 5	Room 6	Room 7	Room 8	Room 9	Room 10	Room 11
	Chest Rad	Rad	Rad	Rad	Tom and Rad	IVU	IVU	Main Fl	2nd Fl	3rd Fl	Ang

26.5.10 Eleven-room department

As noted in paragraph 24.11.1 an eleven-room department differs from a ten-room department by the addition *either* of a further facility for intravenous urology *or* a further radiographic facility. However the former may normally be preferred and therefore the "Basic List" is given for the equipment with the alternative given under the "Additional List".

Basic List											
Group 1											
Basin, medium, no plug	1	1	1	1	1	1	1	1	1	1	1
Clip, equipment, 12, wall mounted	–	–	–	–	–	–	–	–	–	–	1
Clock, with sweep second hand	1	1	1	1	1	1	1	1	1	1	1
Cupboard, with 2 shelves, melamine faced [700 × 1200 × 500mm under worktop]	2	2	2	2	2	2	2	2	2	2	2
Departmental intercom	1	1	1	1	1	1	1	1	1	1	1
Dimmer [for room lights]	1	1	1	1	1	1	1	1	1	1	1
Fused spur unit, 13A, switched indicating	1	1	1	1	1	1	1	1	1	1	1
Hook, hat and coat, 2	2	2	2	2	2	2	2	2	2	2	2
Isolator, 15A, SP&N	1	–	–	–	–	–	–	–	–	–	–
Isolator, 30A, SP&N	1	–	–	–	–	–	–	–	–	–	–
Mains isolator with easy action lever [for X-ray equipment]	1	1	1	1	1	1	1	1	1	1	1
Panel display, wall mounted [800 × 600mm]	1	1	1	1	1	1	1	1	1	1	1
Patient/staff call push reassurance lamp and reset unit	1	1	1	1	1	1	1	1	1	1	1
Plinth [for cupboard]	2	2	2	2	2	2	2	2	2	2	2
Radiation warning light [to be provided at each entry point]	1	1	1	1	1	1	1	1	1	1	1

	Room 1	Room 2	Room 3	Room 4	Room 5	Room 6	Room 7	Room 8	Room 9	Room 10	Room 11
	Chest Rad	Rad	Rad	Rad	Tom and Rad	IVU	IVU	Main Fl	2nd Fl	3rd Fl	Ang
26.5.10 Eleven-room department (continued)											
Basic List											
Group 1 (continued)											
Shelves, 2, melamine faced [1200 × 600mm]	2	2	2	2	2	2	2	2	2	2	2
Socket outlet, 13A, switched, double	4	4	4	4	4	4	4	4	4	4	4
Taps, mixer, wall mounted, elbow action, H and drinking	1 pr	1 pr	1 pr	1 pr	1 pr	1 pr	1 pr	1 pr	1 pr	1 pr	1 pr
Track, window curtain [or venetian blinds]	1	1	1	1	1	1	1	1	1	1	1
Whiteboard, wall mounted [800 × 600mm]	1	1	1	1	1	1	1	1	1	1	1
Worktop, melamine faced [1200 × 600mm]	2	2	2	2	2	2	2	2	2	2	2
RACK, PROTECTIVE APRON, FOUR, WALL MOUNTED	1	1	1	1	1	1	1	1	1	1	1
FITMENT, PEGS, LEAD-RUBBER GLOVES, TWO PAIR, WALL MOUNTED	1	1	1	1	1	1	1	1	1	1	1
FITMENT, RAIL FOR GONAD SHIELD, WALL MOUNTED	1	1	1	1	1	1	1	1	1	1	1
SCREEN, HINGED OR CUBICLE, PROTECTIVE WITH VIEWING WINDOW	1	1	1	1	1	1	1	1	1	1	1
SCREEN, PROTECTIVE, WITH 2 NO. FOLDING SECTION ENDS	–	–	–	–	–	1	1	–	–	–	–
Group 2											
Dispenser, paper cup	1	1	1	1	1	1	1	1	1	1	1
Dispenser, paper towel [BS 1439]	1	1	1	1	1	1	1	1	1	1	1
Dispenser, soap	1	1	1	1	1	1	1	1	1	1	1
ILLUMINATOR, X-RAY FILM, DOUBLE, WALL MOUNTED [with spot light facility]	1	1	1	1	1	1	1	1	1	1	2
Group 3											
ANGIOGRAPHIC FLUOROGRAPHIC TABLE WITH TABLE TOP STEPPING UNIT, Kv REDUCTION UNIT, FILM CHANGER RAPID AND FILM PROGRAMME SELECTOR	–	–	–	–	–	–	–	–	–	–	1 (AngC)
BOX, CASSETTE STORAGE, MOBILE	1	1	1	1	1	1	1	1	1	1	1
CABLES, HV, X-RAY TUBE PAIR	1	1	1	2	2	2	2	2	2	2	1
CABLES, HV, SUPPORT	1	1	1	2	2	2	2	2	2	2	1
CASSETTE HOLDER, LATERAL	–	–	–	1	–	–	–	1	–	–	–
CHAMBER, IONISATION	1	2	2	2	2	2	2	1	1	1	2
CHAIR, PATIENT'S, FOR DENTAL RADIOGRAPHY [may be located in Dental Department]	–	–	1	–	–	–	–	–	–	–	–
CHEST X-RAY UNIT, AUTOMATED, CASSETTELESS	1(ChF)	–	–	–	–	–	–	–	–	–	–
CONE [may be located in Dental Department extra as required]	–	–	1	1	–	–	–	–	–	–	–
CONTROL UNIT, AUTOMATIC BRIGHTNESS	–	–	–	–	–	–	–	1	1	1	1
DENTAL X-RAY UNIT, INTRA ORAL [may be located in Dental Department]	–	–	1 (DenA)	–	–	–	–	–	–	–	–
GENERATOR, HV, WITH STATOR CONTROL AND AUTOMATIC EXPOSURE CONTROL	1 (GenC)	1 (GenC)	1 (GenC)	1 (GenC)	1 (GenC)	1 (GenC)	1 (GenC)	1 (GenC)	1 (GenC)	1 (GenC)	1 (GenD)
IMAGE INTENSIFIER WITH CCTV SYSTEM [Dual field *single field. With suspension if necessary]	–	–	–	–	–	–	–	1	1	1*	1

26.5.10 Eleven-room department (continued)

	Room 1	Room 2	Room 3	Room 4	Room 5	Room 6	Room 7	Room 8	Room 9	Room 10	Room 11
	Chest Rad	Rad	Rad	Rad	Tom and Rad	IVU	IVU	Main Fl	2nd Fl	3rd Fl	Ang
Basic List											
Group 3 (continued)											
MAMMOGRAPHIC UNIT	–	1 (MamB)	–	–	–	–	–	–	–	–	–
MARKER X-RAY FILM DAYLIGHT	1	1	1	1	1	1	1	1	1	1	1
MONITOR, TV, SMALL	–	–	–	–	–	–	–	1	1	1	1
PAEDIATRIC ACCESSORIES	–	–	–	–	–	–	–	–	1 (PaedB)	–	–
PAN-TOMOGRAPHIC DENTAL UNIT [may be located in Dental Department]	–	–	1(DenB)	–	–	–	–	–	–	–	–
PROCESSOR, AUTOMATIC [Attached to automatic chest unit]	1 (ProcB)	–	–	–	–	–	–	–	–	–	–
RADIOLOGICAL EQUIPMENT INTERFACE ALLOC – FLUOROGRAPHIC	–	–	–	–	–	–	–	1	1	1	1
RADIOLOGICAL EQUIPMENT INTERFACE ALLOC – RADIOGRAPHIC	1	1	1	1	1	2	2	1	1	1	1
RECORDER, VIDEO TAPE	–	–	–	–	–	–	–	1	–	–	–
SKULL X-RAY UNIT	–	–	–	1(SkA)	–	–	–	–	–	–	–
STAND/CHEST, VERTICAL, WITH CASSETTE FOR FRONT FACE [with compression band]	–	1(ChC)	1(ChB)	1(ChB)	1(ChA)	–	–	–	–	–	–
SYRINGE, INJECTOR, AUTOMATIC	–	–	–	–	–	–	–	–	–	–	1
TABLE, FLUORSCOPIC [with patient support immobilisation devices]	–	–	–	–	–	–	–	1(FlB)	1(FlB)	1(FlB)	–
TABLE, RADIOGRAPHIC, WITH CASSETTE HOLDER LATERAL [with compression band]	–	1(RtC)	1(RtB)	1(RtB)	1(RtA)	2(RtB)	2(RtB)	–	–	–	–
TOMOGRAPHIC ATTACHMENT	–	–	–	–	–	2 (TomA)	2 (TomA)	–	–	–	–
TOMOGRAPHIC UNIT	–	–	–	–	1 (TomC)	–	–	–	–	–	–
TUBE, X-RAY, HIGH SPEED	1	1	1	2	2	2	2	2	2	2	1
TUBE, X-RAY, SUPPORT [*may be integral with automated chest unit. With floor or ceiling tracks as appropriate]	1(TsB)*	1(TsB)	1(TsB)	1(TsB)	1(TsB)	2(TsA)	2(TsA)	1(TsB)	1(TsB)	1(TsB)	–
TROLLEY, X-RAY, TRANSLUCENT TOP, WITH BRAKES	–	–	–	1	–	–	–	–	–	–	–
WARNING LIGHT, TUBE SELECTION	–	–	–	2	2	2	2	–	–	–	–
Chair, upright, stacking	2	2	2	2	2	2	2	3	3	3	3
Holder, sack, medium freestanding	1	1	1	1	1	1	1	1	1	1	1
Steps, couch mounting	–	1	1	1	2	2	2	1	1	1	1
Trolley, dressing/instrument, s.s. buffered [450 × 450 mm]	1	1	1	1	1	1	1	1	1	1	1
Trolley, video tape recorder	–	–	–	–	–	–	–	1	–	–	–
Group 4											
Apron, lead-rubber	2	2	2	2	2	3	3	3	3	3	3
Curtain, window, fire retardant, pair [or venetian blinds]	1	1	1	1	1	1	1	1	1	1	1
Gloves, lead-rubber, pair	1	1	1	1	1	1	1	2	2	2	2
Lead-rubber cassette masking, allocation	1	1	1	1	1	2	2	1	1	1	1
Marker, film, set	1	1	1	1	1	2	2	1	1	1	1
Measure, tape, 1800 mm	1	1	1	1	1	2	2	1	1	1	1
Overlay foam, X-ray, with plastic cover	–	1	1	1	2	2	2	1	1	1	1
Pillow	–	2	2	2	2	4	4	2	2	2	2
Positioning aids, set	1	1	1	1	1	2	2	1	1	1	1
Rule, plastic, 450 mm, graduated	1	1	1	1	1	2	2	1	1	1	1
Sandbag	4	4	4	4	4	8	8	4	4	4	4
Shield, gonad, set	1	1	1	1	1	2	2	1	1	1	1

	Room 1	Room 2	Room 3	Room 4	Room 5	Room 6	Room 7	Room 8	Room 9	Room 10	Room 11
	Chest Rad	Rad	Rad	Rad	Tom and Rad	IVU	IVU	Main Fl	2nd Fl	3rd Fl	Ang
26.5.10 Eleven-room department (continued)											
Basic List											
Group 4 (continued)											
Tray	–	–	–	–	–	2	2	1	1	1	1
Torch, rubber	–	–	–	–	–	–	–	1	1	1	1
Additional List											
Group 3											
TABLE, FLUOROSCOPIC [In lieu of FIB. *Only if justified on myelography work-load]	–	–	–	–	–	–	–	1(FID) or 1(FIC)* or 1(FIE)*	–	–	–
CAMERA, 100mm (or equivalent) [If justified]	–	–	–	–	–	–	–	1	–	–	–
PAEDIATRIC CHEST UNIT [If justified]	1	–	–	–	–	–	–	–	–	–	–
ALTERNATIVE PROVISION FOR ONE OF THE INTRAVENOUS UROLOGY ROOMS											
GENERAL RADIOGRAPHIC FACILITY [In lieu of all other equipment in this IVU room]	–	–	–	–	–	–	As for Room No. 4 within Depart-ment	–	–	–	–

	Room 1	Room 2	Room 3	Room 4	Room 5	Room 6	Room 7	Room 8	Room 9	Room 10	Room 11	Room 12
	Chest Rad	Rad	Rad	Rad	Rad	Tom and Rad	IVU	IVU	Main Fl	2nd Fl	3rd Fl	Ang
26.5.11 Twelve-room department												
Basic List												
Group 1												
Basin, medium, no plug	1	1	1	1	1	1	1	1	1	1	1	1
Clip, equipment, 12, wall mounted	–	–	–	–	–	–	–	–	–	–	–	1
Clock, with sweep second hand	1	1	1	1	1	1	1	1	1	1	1	1
Cupboard, with 2 shelves melamine faced [700 × 1200 × 550mm under worktop]	2	2	2	2	2	2	2	2	2	2	2	2
Departmental intercom	1	1	1	1	1	1	1	1	1	1	1	1
Dimmer [for room lights]	1	1	1	1	1	1	1	1	1	1	1	1
Fused spur unit, 13A, switched, indicating	1	1	1	1	1	1	1	1	1	1	1	1
Hook, hat and coat, 2	2	2	2	2	2	2	2	2	2	2	2	2
Isolator, 15A, SP&N	1	–	–	–	–	–	–	–	–	–	–	–

	Room 1	Room 2	Room 3	Room 4	Room 5	Room 6	Room 7	Room 8	Room 9	Room 10	Room 11	Room 12
	Chest Rad	Rad	Rad	Rad	Rad	Tom and Rad	IVU	IVU	Main Fl	2nd Fl	3rd Fl	Ang

26.5.11 Twelve-room department (continued)

Basic List

Group 1 (continued)

Isolator, 30A, SP&N	1	–	–	–	–	–	–	–	–	–	–	–
Mains, isolator, with easy action lever [for X-ray equipment]	1	1	1	1	1	1	1	1	1	1	1	1
Panel display, wall mounted [800 × 600 mm]	1	1	1	1	1	1	1	1	1	1	1	1
Patient/staff call push reassurance lamp and reset unit	1	1	1	1	1	1	1	1	1	1	1	1
Plinth [for cupboard]	2	2	2	2	2	2	2	2	2	2	2	2
Radiation warning light [to be provided at each entry]	1	1	1	1	1	1	1	1	1	1	1	1
Shelves, 2, melamine faced [1200 × 600 mm]	2	2	2	2	2	2	2	2	2	2	2	2
Socket outlet, 13A, switched, double	4	4	4	4	4	4	4	4	4	4	4	4
Taps, mixer, wall mounted, elbow action, H and drinking	1 pr	1 pr	1 pr	1 pr	1 pr	1 pr	1 pr	1 pr	1 pr	1 pr	1 pr	1 pr
Track, window curtain [or venetian blinds]	1	1	1	1	1	1	1	1	1	1	1	1
Whiteboard, wall mounted [800 × 600 mm]	1	1	1	1	1	1	1	1	1	1	1	1
Worktop melamine faced [1200 × 600 mm]	2	2	2	2	2	2	2	2	2	2	2	2
RACK, FOUR, PROTECTIVE APRON, WALL MOUNTED	1	1	1	1	1	1	1	1	1	1	1	1
FITMENT, PEGS, LEAD-RUBBER GLOVES, TWO PAIR, WALL MOUNTED	1	1	1	1	1	1	1	1	1	1	1	1
FITMENT, RAIL FOR GONAD SHIELD, WALL MOUNTED	1	1	1	1	1	1	1	1	1	1	1	1
SCREEN, HINGED OR CUBICLE, PROTECTIVE WITH VIEWING WINDOW	1	1	1	1	1	1	1	1	1	1	1	1
SCREEN, PROTECTIVE, WITH 2 NO. FOLDING SECTION ENDS	–	–	–	–	–	–	1	1	–	–	–	–
Group 2												
Dispenser, paper cups	1	1	1	1	1	1	1	1	1	1	1	1
Dispenser, paper towel [BS 1439]	1	1	1	1	1	1	1	1	1	1	1	1
Dispenser, soap	1	1	1	1	1	1	1	1	1	1	1	1
ILLUMINATOR X-RAY FILM, DOUBLE, WALL MOUNTED [with spot light facility]	1	1	1	1	1	1	1	1	1	1	1	2
Group 3												
ANGIOGRAPHIC FLUOROGRAPHIC TABLE WITH TABLE TOP STEPPING UNIT, Kv REDUCTION UNIT, FILM CHANGER RAPID AND FILM PROGRAMME SELECTOR	–	–	–	–	–	–	–	–	–	–	–	1 (AngC)
BOX, CASSETTE STORAGE, MOBILE	1	1	1	1	1	1	1	1	1	1	1	1
CABLES, HV, X-RAY TUBE, PAIRS	1	1	1	2	1	2	2	2	2	2	2	1
CABLES, HV, SUPPORT	1	1	1	2	1	2	2	2	2	2	2	1
CASSETTE HOLDER, LATERAL	–	–	–	1	–	–	–	–	1	–	–	–
CHAMBER, IONISATION	1	2	2	2	2	2	2	2	1	1	1	2

	Room 1	Room 2	Room 3	Room 4	Room 5	Room 6	Room 7	Room 8	Room 9	Room 10	Room 11	Room 12
	Chest Rad	Rad	Rad	Rad	Rad	Tom and Rad	IVU	IVU	Main Fl	2nd Fl	3rd Fl	Ang
26.5.11 Twelve-room department (continued)												
Basic List **Group 3** (continued)												
CHAIR, PATIENT'S, FOR DENTAL RADIOGRAPHY [May be located in Dental Department]	–	–	1	–	–	–	–	–	–	–	–	–
CHEST X-RAY UNIT AUTOMATED CASSETTELESS	1(ChF)	–	–	–	–	–	–	–	–	–	–	–
CONE [may be located in Dental Department, extra as required]	–	–	1	1	–	–	–	–	–	–	–	–
CONTROL UNIT AUTOMATIC BRIGHTNESS	–	–	–	–	–	–	–	–	1	1	1	1
DENTAL X-RAY UNIT, INTRA ORAL [may be located in Dental Department]	–	–	1 (DenA)	–	–	–	–	–	–	–	–	–
GENERATOR, HV, WITH STATOR CONTROL AND AUTOMATIC EXPOSURE CONTROL	1 (GenC)	1 (GenC)	1 (GenC)	1 (GenC)	1 (GenC)	1 (GenC)	1 (GenC)	1 (GenC)	1 (GenC)	1 (GenC)	1 (GenC)	1 (GenD)
IMAGE INTENSIFIER WITH CCTV SYSTEM [Dual field. *Single field. With suspension if necessary]	–	–	–	–	–	–	–	–	1	1	1*	1
MAMMOGRAPHIC UNIT	–	1 (MamB)	–	–	–	–	–	–	–	–	–	–
MARKER, X-RAY FILM, DAYLIGHT	1	1	1	1	1	1	1	1	1	1	1	1
MONITOR, TV, SMALL	–	–	–	–	–	–	–	–	1	1	1	1
PAEDIATRIC ACCESSORIES	–	–	–	–	–	–	–	–	–	1 (PaedB)	–	–
PAN-TOMOGRAPHIC, DENTAL UNIT	–	–	1 (DenB)	–	–	–	–	–	–	–	–	–
PROCESSOR, AUTOMATIC [attached to automatic chest unit]	1	–	–	–	–	–	–	–	–	–	–	–
RADIOLOGICAL EQUIPMENT, INTERFACE, ALLOC – FLUOROGRAPHIC	–	–	–	–	–	–	–	–	1	1	1	1
RADIOLOGICAL EQUIPMENT INTERFACE, ALLOC – RADIOGRAPHIC	1	1	1	1	1	1	2	2	–	–	–	–
RECORDER, VIDEO TAPE	–	–	–	–	–	–	–	–	1	–	–	–
SKULL X-RAY UNIT	–	–	–	1(SkA)	–	–	–	–	–	–	–	–
STAND/CHEST, VERTICAL, WITH CASSETTE FOR FRONT FACE [with compression band]	–	1(ChC)	1(ChB)	1(ChB)	1(ChB)	1(ChA)	–	–	–	–	–	–
SYRINGE, INJECTOR, AUTOMATIC	–	–	–	–	–	–	–	–	–	–	–	1
TABLE, FLUOROSCOPIC [with patient support and immobilisation devices]	–	–	–	–	–	–	–	–	1(FlB)	1(FlB)	1(FlB)	–
TABLE, RADIOGRAPHIC, WITH CASSETTE HOLDER LATERAL [with compression band]	–	1(RtC)	1(RtC)	1(RtB)	1(RtB)	1(RtA)	2(RtB)	2(RtB)	–	–	–	–
TOMOGRAPHIC ATTACHMENT	–	–	–	–	–	–	2 (TomA)	2 (TomA)	–	–	–	–
TOMOGRAPHIC UNIT	–	–	–	–	–	1 (TomC)	–	–	–	–	–	–
TUBE, X-RAY, HIGH SPEED	1	1	1	2	1	2	2	2	2	2	2	1

	Room 1	Room 2	Room 3	Room 4	Room 5	Room 6	Room 7	Room 8	Room 9	Room 10	Room 11	Room 12
	Chest Rad	Rad	Rad	Rad	Rad	Tom and Rad	IVU	IVU	Main Fl	2nd Fl	3rd Fl	Ang
26.5.11 Twelve-room department (continued)												
Basic List												
Group 3 (continued)												
TUBE, X-RAY, SUPPORT [with floor or ceiling tracks as appropriate *may be integral with automated chest units	1(TsB)*	1(TsB)	1(TsB)	1(TsB)	1(TsB)	1(TsB)	2(TsA)	2(TsA)	1(TsB)	1(TsB)	1(TsB)	–
TROLLEY, X-RAY, TRANSLUCENT TOP, WITH BRAKES	–	–	–	1	–	–	–	–	–	–	–	–
WARNING LIGHT TUBE SELECTION	–	–	–	2	–	2	2	2	–	–	–	–
Chair, upright, stacking	2	2	2	2	2	2	2	2	3	3	3	3
Holder, sack, medium, freestanding	1	1	1	1	1	1	1	1	1	1	1	1
Steps, couch mounting	–	1	1	1	1	2	2	2	1	1	1	1
Trolley, dressing/instrument, s.s. buffered [450 × 450mm]	1	1	1	1	1	1	1	1	1	1	1	1
Trolley, video tape recorder	–	–	–	–	–	–	–	–	1	–	–	–
Group 4												
Apron, lead-rubber	2	2	2	2	2	2	3	3	3	3	3	3
Curtain, window, fire retardant, pair [or venetian blinds]	1	1	1	1	1	1	1	1	1	1	1	1
Gloves, lead-rubber, pair	1	1	1	1	1	1	1	1	2	2	2	2
Lead-rubber cassette masking, allocation	1	1	1	1	1	1	2	2	1	1	1	1
Marker, film, set	1	1	1	1	1	1	2	2	1	1	1	1
Measure, tape, 1800mm	1	1	1	1	1	1	2	2	1	1	1	1
Overlay foam, X-Ray, with plastic cover	–	1	1	1	1	2	2	2	1	1	1	1
Pillow	–	2	2	2	2	2	4	4	2	2	2	2
Positioning aids, set	1	1	1	1	1	1	2	2	1	1	1	1
Rule, plastic, 450mm graduated	1	1	1	1	1	1	2	2	1	1	1	1
Sandbag	4	4	4	4	4	4	8	8	4	4	4	4
Shield, gonad, set	1	1	1	1	1	1	2	2	1	1	1	1
Torch, rubber	–	–	–	–	–	–	–	–	1	1	1	1
Tray	–	–	–	–	–	–	2	2	1	1	1	1
Additional List												
Group 3												
TABLE FLUOROSCOPIC [In lieu of FIB. *Only if justified on myelography workload	–	–	–	–	–	–	–	–	1(FID) or 1(FIC)* or 1(FIE)*	–	–	–
CAMERA, 100mm (or equivalent) [If justified]	–	–	–	–	–	–	–	–	1	1	–	–
PAEDIATRIC CHEST UNIT [If justified]	1 (PaedA)	–	–	–	–	–	–	–	–	–	–	–
TABLE, FLUOROSCOPIC, PAEDIATRIC [If justified in lieu of FIB and PaedB]	–	–	–	–	–	–	–	–	–	1 (PaedC)	–	–

Ultrasonic equipment will be located in the radiodiagnostic and obstetric department. One room for ultrasonics is recommended for departments with 4 to 11 radiodiagnostic rooms albeit that the room may be divided where more than one equipment is installed. For a department with 12 radiodiagnostic rooms, two ultrasonic rooms are recommended (see paragraph 25.2)

	Number of radiodiagnostic rooms			
	4 and 5	6 and 7	8 to 11	12
EQUIPMENT LOCATED IN RADIODIAGNOSTIC DEPARTMENT				
Group 1				
Basin, medium, no plug	1	1	1	2
Clock with sweep second hand	1	1	1	2
Cupboard, under worktop with shelves, melamine faced [700 × 1200 × 300mm]	2	2	2	4
Departmental intercom	1	1	1	2
Dimmer [for room lights]	1	1	1	2
Fused spur unit, 13A switched, indicating	1	1	1	2
Hook, hat and coat, two	2	2	2	4
Lotion cupboard, heated wall mounted	1	1	1	2
Panel display, wall mounted [800 × 600mm]	1	1	1	2
Patient/staff call, push reassurance lamp and reset unit	1	1	1	2
Plinth [For cupboard]	2	2	2	4
Shelf, melamine faced	2	2	2	4
Socket outlet, 13A switched, double	4	4	4	8
Taps, mixer, wall mounted, elbow action, H and drinking	1 pr	1 pr	1 pr	2 pr
Track, window, curtain [or venetian blinds]	1	1	1	2
White board, wall mounted [800 × 600mm]	1	1	1	2
Worktop, melamine faced [1200 × 600mm]	2	2	2	4
Group 2				
Dispenser, paper cup	1	1	1	2
Dispenser, paper towel [BS 1439]	1	1	1	2
Dispenser, soap	1	1	1	2
ILLUMINATOR X-RAY FILM, DOUBLE, WALL MOUNTED [With spot light facility]	1	1	1	2

	Number of radiodiagnostic rooms			
	4 and 5	6 and 7	8 to 11	12
Group 3				
ULTRASONIC EQUIPMENT [*May be in obstetric department]	Ult A* and Ult B	Ult B	Ult A, Ult C and Ult E	Ult A, Ult C, Ult D and Ult E
Couch, exam/treatment, cover dispenser	1	1	2	2
Chair, upright, stacking	2	2	2	4
Holder, sack, medium freestanding	1	1	2	2
Steps, couch mounting	1	1	2	2
Trolley, dressing/instrument, s.s., buffered [450 × 450mm]	1	1	1	2
Stool, adjustable	1	1	2	2
Group 4				
Measure tape, 1800mm	1	1	2	2
Overlay foam with plastic cover	1	1	2	2
Pillow	2	2	4	4
Rule, plastic, 450mm, graduated	1	1	2	2
Tray	1	1	2	2
EQUIPMENT LOCATED IN OBSTETRIC DEPARTMENT				
Group 3				
ULTRASONIC EQUIPMENT	–	Ult A and Ult B	Ult A and Ult B	Ult A and Ult B

26.7.1 Dark room(s) and associated processing/viewing/dispensing area

Whereas this Equipment Note is based on the use of daylight film-handling system (see paragraph 20.7) every department will nevertheless require at least one processing area where 'non-daylight' X-ray film can be handled and processed. This may take the form of a dark-room and the following lists the equipment required for such an area. One area should be sufficient for departments with 2 to 9 radiodiagnostic rooms and two for 10 to 12 radiodiagnostic rooms. See para 26.5.10 for the number and type of processors recommended. Fully daylight processing areas are dealt with in paragraph 26.5.9.

NOTE: Not all departments will wish to have a daylight system throughout.

	Quantity
Basic List	
Group 1	
Cable outlet	1
Departmental intercom	1
'Do not enter' warning light	1
Drainage connection [of sufficient diameter to discharge the effluence of the processor]	1
Drainer [700 × 450 mm]	1
Exhaust duct, lagged and cased	1
Fused spur unit, 13A switched bench mounted	1
Fused spur unit, 13A, switched, indicating	2
Hook, hat and coat, 2	1
Hopper, X-ray films	1
Mains, isolator, 20A, SP&N [one at input and one at output end of processor]	2
Panel, display, wall mounted [800 × 600 mm]	1
Photographic safe light	1
Rack, sorting, X-ray film	1
Shelf [600 × 400 mm]	2
Sink, London [250 × 750 × 550 mm]	1
Socket outlet, 13A, switched, double	1
Socket outlet, 13A, switched, single, indicating [Plus one for each daylight film dispenser if provided]	2
Storage unit, cassette rack, on plinth [800 × 400 × 500 mm]	1
Storage unit, drawer/cupboard 1 shelf on plinth [800 × 600 × 500 mm]	1
Storage unit, envelopes on plinth [250 × 600 × 500 mm]	1
Taps, bib, mixer with nozzle union H and C	1 pr
Telephone outlet	1
Water economy/mixer unit, wall mounted [As specified by processor supplier]	1
Worktop, linoleum faced [1600 × 500 mm]	1
Worktop, removable [1200 × 600 mm]	1
Worktop for inset illuminator [1800 × 600 mm]	1
Group 2	
Dispenser, paper towel	1
FILM MARKER, BENCH MOUNTED	1
ILLUMINATOR, X-RAY FILM, BENCH MOUNTED, INSET	1
ILLUMINATOR, X-RAY FILM, SINGLE WALL MOUNTED [With spot light facility]	1
ILLUMINATOR, X-RAY FILM, TRIPLE WALL MOUNTED [With spot light facility]	1

	Quantity
Group 3	
Holder sack, medium, freestanding	1
Stool, adjustable	1
AUTOMATIC CHEMICAL MIXER	1
PROCESSOR, X-RAY FILM, AUTOMATIC [To be high-capacity PROC C if provided in department. See para 26.3.26.]	1
X-RAY FILM DAYLIGHT UNLOAD/ TRANSPORT BOX	1
DISPENSER, DAYLIGHT, X-RAY FILM [Each for a different film size (or one dispenser assembly dispensing a range of film sizes)]	4
ADAPTOR DAYLIGHT UNLOADER, X-RAY FILM	1
Group 4	
Bin, waste paper	1
Guillotine, small	1
Magnifying glass	1
Rack, stationery	1
Additional List	
Group 3	
COMBINED DAYLGHT DISPENSE/ UNLOAD UNIT ATTACHED TO X-RAY FILM PROCESSOR [In lieu of separate dispensers and daylight unloading adaption for processor if justified (see paragraph 20.7) to handle a minimum of four different film sizes.]	1

26.7.2 Daylight film processing/viewing/dispensing area(s)

This Equipment Note is based on the use of a daylight film-handling system. One processor (or perhaps two in large departments) will be installed with a dark room (see para 26.3.24) and the remainder in a 'daylight' environment although the need to be able to render such an area 'safe-lit' should always be considered. The following lists the equipment required in each daylight processing area. See para 26.3.26 for the number and type of processors recommended.

	Quantity
Basic List	
Group 1	
Cable outlet	1
Departmental intercom	1
Drainer [700 × 450mm]	1
Drainage connection [Of sufficient diameter to discharge the effluence of the processor]	1
Exhaust duct, lagged and cased	1
Fused spur unit, 13A, switched wall mounted	1
Fused spur unit, 13A, switched single indicating	1
Hook, hat and coat, two	1
Mains, isolator, 20A, SP&N	1
Panel display, wall mounted	1
Rack, sorting, X-ray films	1
Shelf [600 × 400mm]	2
Sink, London [250 × 750 × 550mm]	1
Socket outlet, 13A, switched, double	1
Socket outlet, 13A, switched, single [Plus one for each daylight dispenser if provided]	2
Taps, bib, mixer with nozzle union H and C	1 pr
Water economy/mixer unit, wall mounted [As specified by processor supplier]	1
Worktop for inset illuminator	1
Worktop, linoleum faced [1600 × 500mm]	1
Worktop, removable [1200 × 600]	1
Group 2	
Dispenser, paper towel	1
ILLUMINATOR, X-RAY FILM, TRIPLE, WALL MOUNTED [With spot light facility]	1
ILLUMINATOR, X-RAY FILM, BENCH MOUNTED, INSET	1

	Quantity
Group 3	
Holder, sack medium, freestanding	1
Stool, adjustable	1
AUTOMATIC CHEMICAL MIXER	1
DISPENSER, DAYLIGHT, X-RAY FILM [Each for a different size film (or one dispenser assembly dispensing a range of film sizes)]	4
ADAPTOR, DAYLIGHT, UNLOADER, X-RAY FILM	1
PROCESSOR, X-RAY FILM, AUTOMATIC [See para 26.3.26.]	1
Group 4	
Bin, waste paper	1
Glass, magnifying	1
Guillotine, small	1
Rack, stationery	1
Additional List	
Group 3	
COMBINED DAYLIGHT DISPENSE/UNLOAD UNIT ATTACHED TO X-RAY FILM PROCESSOR [In lieu of separate dispensers and daylight unloading adaptor for processor, if justified (see paragraph 20.7) to handle a minimum of four different film sizes.]	1

26.7.3 X-ray film processors: types and numbers

The following lists the number and types of processor recommended for departments of various sizes. One at least will be installed with a dark room and others in a 'daylight' environment (see paras 26.3.24 and 26.3.25). Where a high capacity processor of type Proc C is recommended this should be the processor installed with the dark room to handle the 'non-daylight' film from a rapid film-changer. If the daylight system installed is based on combined dispense/unload units the number of processors may need to be reduced to contain costs (see paragraph 20.7)

	Number of radiodiagnostic rooms served										
	2	3	4	5	6	7	8	9	10	11	12
Basic List											
Group 3											
PROCESSOR X-RAY FILM, AUTOMATIC [*A further Proc B processor will be installed with the automated cassetteless chest unit in the room dedicated to chest radiography.]	1 Proc A + 1 Proc B	2 Proc B	2 Proc B	2 Proc B	3 Proc B	2 Proc B + 1 Proc C	3 Proc B + 1 Proc C	3 Proc B* + 1 Proc C	3 Proc B* + 1 Proc C	4 Proc B* + 1 Proc C	4 Proc B* + 1 Proc C
PROCESSOR, X-RAY FILM, AUTOMATIC, DENTAL [May be in Dental Department]	1 Proc D	1 Proc D	1 Proc D	1 Proc D	1 Proc D	1 Proc D	1 Proc D	1 Proc D	1 Proc D	1 Proc D	1 Proc D
Additional List											
PROCESSOR, X-RAY FILM, AUTOMATIC [In lieu of 1 Proc B if angiography with rapid film-changer has been justified]	–	–	–	1 Proc C	1 Proc C	–	–	–	–	–	–
PROCESSOR, SMALL, X-RAY FILM [Only if a 100mm (or equivalent) camera has been justified and installed]	–	–	1 Proc E	1 Proc E	1 Proc E	1 Proc E	1 Proc E	1 Proc E	1 Proc E	1 Proc E	1 Proc E

26.7.4 Silver recovery

	Number of Radiodiagnostic Rooms Served										
	2	3	4	5	6	7	8	9	10	11	12
Group 1											
Fused spur unit, 13A unswitched indicating	2	2	2	4	4	4	4	6	6	8	8
Drainage connection	2	2	2	4	4	4	4	6	6	8	8
Group 3											
Silver recovery unit, electrolytic [Unless metal replacement bins or collection of used fixer is the preferred system]	1	1	1	2	2	2	2	3	3	4	4
Transfer unit, silver recovery [With 'unit fail', high level light, wall mounted]	1	1	1	2	2	2	2	3	3	4	4

26.7.5 X-Ray film cassettes with screens

The recommended provision for a daylight film handling system, ie for 'daylight' cassettes, is shown under Departmental Items (paragraph 26.3.47). Provision is for rare earth (or equivalent) screens. (See paragraph 20.14).

26.7.6 Computer Room

	Quantity
Group 1	
Socket outlet, 13A, switched, double	1
Socket outlet, 13A, switched, single	4
Telephone outlet	1
TV closed circuit outlet	1
Worktop [2400 × 600mm]	1
Group 3	
Chair, upright, stacking	2
Chair, upright, with arms	1
Cupboard, stationery [1800 × 900 × 450mm]	3
Desk, pedestal, single	1
Group 4	
Bin, waste paper	1
Curtain window, fire retardant, pair	1
Desk set	1
Office requisites	1
Tray correspondence	1

26.7.7 Central reporting

	Quantity
Group 1	
Departmental intercom	1
Socket outlet, 13A, switched, double	3
Socket outlet, 13A, switched, single	1
Telephone outlet	1
Track, window, curtain	1
Worktop [1800 × 600 × 500mm]	3
Group 2	
ILLUMINATOR X-RAY FILM, FOUR, WALL MOUNTED VARIABLE CONTROL [To be fitted 100mm above worktop with spot light facility	3
Group 3	
Chair, upright, swivel	3
Dictating machine, portable, pocket [With mains adaptor]	3
Group 4	
Bin, waste paper	1
Rack stationery	3
Tray, incoming X-ray films	6
Additional equipment	
Group 3	
Chair, adjustable	1
Desk, typist	1
Monitor, TV radiodiagnostic wall mounted, swivel	1
ILLUMINATOR, X-RAY FILM ALTERNATOR [Display capacity appropriate to department size. To be provided only if a case can be made out as 1 is already provided in the Seminar Room]	1
Typewriter, electric	1

26.7.8 Sorting and collating

	Quantity
Group 1	
Cable outlet	1
Departmental intercom	1
Fused spur unit, 13A, switched, bench mounted	1
Socket outlet, 13A, switched, double	3
Telephone outlet	1
Rack, sorting X-ray film	1
Track, window, curtain	1
Worktop, for inset X-ray film illuminator [1800 × 600mm]	1
Group 2	
ILLUMINATOR, X-RAY FILM, BENCH MOUNTED, INSET	1
Group 3	
Desk, pedestal, single [1200 × 700mm]	1
Chair, upright, with arms	1
Chair, adjustable [450 – 550mm]	3
Table [710 × 1800 × 900mm]	1
Trolley, X-ray film and document transport	2
Group 4	
Bin, waste paper	1
Curtain, window, fire retardant, pair	1
Desk set	2
Office requisites, allocation	1
Rack, stationery	1
Tray, correspondence	2
Tray, incoming, X-ray films	1

26.7.9 Film Despatch area

	Quantity
Group 1	
Departmental intercom	1
Socket outlet, 13A, switched, double	2
Socket outlet, 13A, switched, single	1
Track, window, curtain	1
Group 3	
Chair, adjustable [450 – 550mm]	5
Desk, typist	1
Table [710 × 1800 × 900mm]	6
Typewriter, electric	1
Group 4	
Bin, waste paper	1
Curtain, window, fire retardant, pair	1
Desk set	1
Office requisites, allocation	1
Rack, stationery	1
Tray, correspondence	2
Tray, incoming X-ray films	12

26.8 Radiologists, radiographers and other staff

26.8.1 Consultant's room

The following is required for each room

	Quantity
Group 1	
Cupboard on plinth, 1 shelf, lockable [600 × 600 × 500mm]	2
Departmental intercom	1
Fused spur unit 13A switched, indicating	1
Hook, hat and coat, two	1
Mirror, wall mounted [600 × 300mm]	1
Panel display, wall mounted [600 × 300mm]	1
Socket outlet, 13A, switched double	2
Socket outlet, 13A, switched single	2
Telephone outlet	1
Track, window, curtain	1
Worktop [1800 × 600 × 500mm]	2
Group 2	
ILLUMINATOR, X-RAY FILM, FOUR, WALL MOUNTED, VARIABLE CONTROL [To be fitted 100mm above worktop with built in spotlight]	2
Group 3	
Bookcase, standing, wood doors 4 shelf [1000 × 1200 × 300mm]	1
Cabinet, filing 3 drawer [1320 × 550 × 620mm for Radiographs]	1
Chair, upright with arms	1
Chair, semi-easy, low back	2
Desk, pedestal single	1
ILLUMINATOR X-RAY FILM, HIGH INTENSITY PORTABLE	1
Wardrobe, lockable [1800 × 750 × 500mm]	1
Dictating machine, portable, pocket [with mains adaptor]	1
Group 4	
Binoculars, stereoscopic prismatic	1
Bin, waste paper	1
Brush, clothes	1
Curtain, window, fire retardant, pair	1
Desk set	1
Dividers 200mm long	1
Glass, magnifying	1
Protractor, semi-circular	1
Rack, stationery	1
Ruler, plastic 450mm graduated	1

26.8.2 Typist

	Quantity
Group 1	
Departmental intercom	1
Hook, hat and coat, two	1
Mirror, wall mounted [600 × 300 mm]	1
Panel display, wall mounted [800 × 600 mm]	1
Socket outlet, 13A, switched double	2
Socket outlet, 13A, switched single	1
Telephone outlet	1
Track, window, curtain	1
Group 3	
Cabinet, filing 4 drawer	1
Chair, adjustable [450 – 550 mm]	1
Cupboard, metal, lockable [1800 × 900 × 450 mm]	1
Cupboard, stationery [900 × 900 × 450 mm]	1
Desk, typist [665 × 1200 × 650 mm]	1
Dictating machine playback unit	1
Table [710 × 1800 × 900 mm]	1
Typewriter, electric	1

	Quantity
Group 4	
Bin, waste paper	1
Curtain, window, fire retardant, pair	1
Desk set	1
Office requisites, allocation	1
Rack, stationery	1
Tray, correspondence	2
Tray, incoming X-ray films	2

26.8.3 Seminar Room

A seminar room is applicable to departments with four or more radiodiagnostic rooms

	Quantity
Group 1	
Fused spur unit 13A, switched indicating	3
Fused spur unit 13A, switched single	1
Holder writing material [50 × 200 × 100 mm]	1
Hook, hat and coat, 5	2
Panel display wall mounted [800 × 1200 mm]	1
Rack magazine, wall mounted	1
Socket outlet 13A, switched, double	2
Socket outlet 13A, switched, single	1
Track, window, curtain	1
White board wall mounted	1
Group 2	
ILLUMINATOR, X-RAY FILM, DOUBLE, WALL MOUNTED	2
Group 3	
Bookcase, glass doors, cupboard under [1200 × 1000 × 400 mm]	1
Cabinet, filing, 4 drawer	1
Chair, upright, stacking	20
Cupboard, skeleton	1
Cupboard, storage	1
ILLUMINATOR, X-RAY FILM, ALTERNATOR [Display capacity appropriate to department size]	1
Projector, overhead	1
Projector, slide	1
Screen, projector	1
Skeleton and stand	1
Stand, projector, mobile	1
Table [710 × 1200 × 600 mm]	3

	Quantity
Group 4	
Bin, waste paper	1
Cleaner, white board	1
Curtain, window light proof, pair	1
Phantom, radiographic, skull	1
Tray, slide, circular [for use with projector]	3

26.8.4 Superintendent radiographer's office

	Quantity
Group 1	
Departmental intercom	1
Fused spur unit, 13A, switched indicating	1
Hook, hat and coat, two	1
Panel display, wall mounted [800 × 1200mm]	1
Telephone outlet	1
White board, wall mounted [800 × 600mm]	1
Track, window, curtain	1
Group 2	
ILLUMINATOR, X-RAY FILM, DOUBLE WALL MOUNTED [With spotlight facility]	1
Case, key, 30 hooks	1
Group 3	
Bookcase, standing, open, 2 shelf [900 × 1200 × 300mm]	1
Cabinet, filing, 4 drawer [1300 × 450 × 600mm]	1
Chair, semi-easy, low back	2
Chair, upright, arm	1
Cupboard, metal, lockable [1800 × 900 × 450mm]	1
Desk pedestal, single	1
Dictating machine, portable, pocket [with mains adaptor]	1
Group 4	
Bin, waste paper	1
Calculator, electronic display, pocket	1
Curtain, window, fire retardant, pair	1
Desk set	1
Rack, stationery	1
Rule, plastic, 450mm graduated	1
Stop watch	1
Thermometer, maximum/minimum	1
Torch, rubber	1
Tray, correspondence	1

26.8.5 Washroom/WC: male staff

	Quantity
Group 1	
Basin, medium, with plug	1
Holder; toilet roll, surface mounted	1
Hook, single, small, wall mounted	1
Shaver, socket outlet	1
Shelf, melamine faced	1
Taps, pillar, H and C	1 pr
WC, hospital type, general purpose with concealed cistern	1
Group 2	
Dispenser paper towel	1
Dispenser soap	1
Group 3	
Holder, sack, small, freestanding	1
Group 4	
Brush, WC and holder	1

26.8.6 Washroom/WC: female staff 1 WC

	Quantity
Group 1	
Basin, medium, with plug [500 × 400mm]	1
Holder, toilet roll, surface-mounted	1
Hook, single, small, wall mounted	2
Mirror, wall-mounted [600 × 300mm]	1
Shelf, melamine faced [300 × 150mm]	1
Taps, pillar, H and C	1 pr
WC adult, hospital type general purpose, with concealed cistern [750 × 350 × 400mm]	1
Group 2	
Dispenser paper towel [BS 1439]	1
Dispenser soap	1
Group 3	
Holder, sack, small, foot operated freestanding	1
Holder, sack, small, freestanding	1
Group 4	
Brush, WC and holder	1

26.8.7 Staff Cloaks: female

	Quantity	
	15 Staff	30 Staff
Group 1		
Hook, hat and coat, three	1	2
Mirror, wall mounted [1500 × 400 mm]	1	2
Group 3		
Chair, stacking	2	4
Locker, clothing, twin [1800 × 450 × 450 mm]	8	15
Rail, assembly, coat hanging with security, 15 persons	1	2
Trolley, soiled linen, single ring	1	1
Group 4		
Bin, waste paper	1	1

26.8.8 Staff room for radiographers

	Number of radiodiagnostic rooms										
	2	3	4	5	6	7	8	9	10	11	12
Group 1											
Clock impulse	1	1	1	1	1	1	1	1	1	1	1
Cupboard on plinth [800 × 500 × 500 mm]	2	2	2	2	2	2	2	2	2	2	2
Cupboard, wall mounted 1 shelf [600 × 600 × 300 mm]	2	2	2	2	2	2	2	2	2	2	2
Departmental intercom	1	1	1	1	1	1	1	1	1	1	1
Mirror, wall mounted [1500 × 400 mm]	1	1	1	1	1	1	1	1	1	1	1
Panel display [800 × 1200 mm]	2	2	2	2	2	2	2	2	2	2	2
Sink and drainer s.s.	1	1	1	1	1	1	1	1	1	1	1
Socket outlet, 13A, switched double	1	1	1	1	1	1	1	1	1	1	1
Taps pillar, high neck deck mounted, H&C	1 pr	1 pr	1 pr	1 pr	1 pr	1pr	1 pr	1 pr	1 pr	1pr	1pr
Track, window curtain	1	1	1	1	2	2	2	2	2	2	2
Worktop, melamine faced [600 × 600 mm]	1	1	1	1	1	1	1	1	1	1	1
Group 2											
Board, location index and shelf	1	1	1	1	1	1	1	1	1	1	1
Dispenser, paper towel	1	1	1	1	1	1	1	1	1	1	1
Dispenser, soap	1	1	1	1	1	1	1	1	1	1	1
Holder, kitchen roll	1	1	1	1	1	1	1	1	1	1	1
Group 3											
Bookcase, glass doors, cupboard under [1200 × 1000 × 400 mm]	1	1	1	1	1	1	1	1	1	1	1
Chair, easy, unit type	3	4	5	7	8	9	10	11	13	14	15
Chair, easy, open arms, low back	3	4	5	7	8	9	10	11	13	14	15
Settee/couch convertible	1	1	1	1	1	1	1	1	1	1	1
Table, occasional, round	3	3	3	3	3	3	4	4	4	4	4
Table [710 × 1200 × 600 mm]	1	1	1	1	1	1	1	1	1	1	1
Group 4											
Bin, waste paper	1	1	1	1	2	2	2	2	2	2	2
Curtain, window, fire retardant, pair	1	1	1	1	2	2	2	2	2	2	2
Decorative features, allocation B	1	1	1	1	1	1	1	1	1	1	1

26.8.9 Beverage Bay

	Number of radiodiagnostic rooms										
	2	3	4	5	6	7	8	9	10	11	12
Group 1											
Worktop, melamine faced [600 × 600 mm]	1	1	1	1	1	1	1	1	1	1	1
Cupboard on plinth	2	2	2	2	2	2	2	2	2	2	2
Taps pillar, high neck, deck mounted, H&C	1 pr	1 pr	1 pr	1 pr	1 pr	1 pr	1 pr	1 pr	1 pr	1 pr	1 pr
Cooker controller	1	1	1	1	1	1	1	1	1	1	1
Fused spur unit, 13A, switched, indicating	1	1	1	1	1	1	1	1	1	1	1
Socket outlet, 13A, switched, double	1	1	1	1	1	1	1	1	1	1	1
Sink and drainer [1200 × 600 mm]	1	1	1	1	1	1	1	1	1	1	1
Group 2											
Dispenser, paper towel [BS 1439]	1	1	1	1	1	1	1	1	1	1	1
Dispenser, soap	1	1	1	1	1	1	1	1	1	1	1
Holder, kitchen roll	1	1	1	1	1	1	1	1	1	1	1
Group 3											
Cooker, electric, small	1	1	1	1	1	1	1	1	1	1	1
Kettle, electric [3 pint, cut-out on boiling]	1	1	1	1	1	1	2	2	2	2	2
Holder, sack, medium, freestanding	1	1	1	1	1	1	1	1	1	1	1
Refrigerator, 4 cu ft. under bench	1	1	1	1	1	1	1	1	1	1	1
Group 4											
Bowl (basin), individual, sugar	1	1	1	1	1	1	2	2	2	2	2
Cup, Russelware	10	15	15	20	20	25	30	30	30	40	40
Jug, graduated, 1 pint	1	1	1	1	1	1	2	2	2	2	2
Knife, bread, s.s 8" blade	1	1	1	1	1	1	1	1	1	1	1
Opener, bottle, hand	1	1	1	1	1	1	1	1	1	1	1
Plate, side, Russelware	10	15	15	20	20	25	30	30	35	40	40
Pot, tea, s.s. 4 pint	1	1	1	1	1	1	2	2	2	2	2
Saucer, Russelware	10	15	15	20	20	25	30	30	35	40	40
Saucepan, aluminium, 2 pint	1	1	1	1	1	1	2	2	2	2	2
Spoon, tea, plastic	10	15	15	20	20	25	30	30	35	40	40
Tray, serving	1	1	1	1	1	1	2	2	2	2	2

26.8.10 Cleaning space

	Quantity
Group 1	
Clip, spring [32 mm dia]	9
Rail, towel, 3 arm, wall mounted	1
Shelf, melamine faced [600 × 300 mm]	1
Shelf [1500 × 300 mm]	2
Sink and drainer, s.s. [1200 × 600 mm]	1
Sink, London, small low level [600 × 400 × 250 mm]	1
Socket outlet, 13A, switched single	1
Taps, bib H and C	2 pr
Group 2	
Dispenser, paper towel [BS 1439]	1
Dispenser, soap	1
Locker, small, wall mounted	4

	Quantity
Group 3	
Holder, sack, large, mobile	1
Trolley, cleaner	1
Scrubbing/Polishing machine, industrial	1
Dry suction machine, industrial, cylinder driven brushes	2
Mop bucket, wringer type, double, mobile	1
Group 4	
Brush, hearth, horsehair	1
Bucket, plastics, 7 litre	3
Dustpan, polypropylene	1
Mop, floor, complete	3
Stapler, paper sack	1

26.8.11 Porters waiting area

	Quantity
Group 1	
Departmental intercom	1
Group 3	
Chair, upright stacking	2
Cupboard, metal, lockable [1800 × 900 × 450mm]	1
Table [700 × 1600 × 800mm]	1
Group 4	
Bin, waste paper	1
Ash tray	2

26.9 Storage

26.9.1 General storage

	Number of Radiodiagnostic rooms served										
	2	3	4	5	6	7	8	9	10	11	12
Group 1											
Hook, single, large	2	2	2	2	3	3	4	4	5	5	6
Shelf [1200 × 300mm]	6	6	6	8	8	10	12	14	14	16	18
Group 3											
Ladder, step, platform type [900mm]	1	1	1	1	1	1	1	1	1	1	1

26.9.2 Unused film store

Group 1											
Shelf [1200 × 400mm]	3	3	4	6	7	8	9	10	11	11	12
Shelf [900 × 400mm]	–	1	1	1	1	1	1	1	1	1	1
Group 2											
Extinguisher, fire, dry powder, wall mounted [3.6Kg]	1	1	1	1	1	1	2	2	2	2	2

26.9.3 Radiographs

Storage is required for radiographs up to 2 years old. Radiographs should be stored on vertical storage racks, five shelves high, with vertical support of 900mm centres and sub-divisions at 150mm intervals. Each 400mm shelf should be 450mm deep with a clear height of 375mm between shelves. A total shelf length of 30 metres is required per diagnostic room

Group 1											
Storage racks, metal, 5 shelves, with total 30 metres shelving length	3	6	7	7	10	10	16	17	17	19	19
Group 2											
Extinguisher, fire, dry powder, wall mounted [3.6Kg]	1	1	1	1	1	1	1	1	1	1	1
Group 3											
Stool, kick	1	1	1	1	1	1	2	2	2	2	2

	Number of Radiodiagnostic rooms served										
	2	3	4	5	6	7	8	9	10	11	12
26.9.4 Chemical store											
Group 1											
Cupboard with shelves melamine faced under worktop [700 × 600 × 500 mm]	2	2	2	2	3	3	4	4	5	5	6
Plinth	2	2	2	2	3	3	4	4	5	5	6
Socket outlet, 13A, switched, double	1	1	1	1	1	1	2	2	2	2	3
Shelf melamine faced [1200 × 400 mm]	1	2	2	2	3	3	4	4	5	5	6
Shelf [1500 × 400 mm]	1	3	7	8	10	12	14	14	18	18	18
Worktop melamine faced [1200 × 600 mm]	2	2	2	2	3	3	4	4	5	5	6
26.9.5 Mobile X-Ray units											
Group 1											
Rack, protective apron, four, wall mounted	1	1	1	1	1	1	1	1	1	1	1
Socket outlet, 13A switched, single	1	2	2	2	2	3	3	3	4	4	4
Group 3											
X-RAY UNIT, MOBILE [See paragraph 25.1. For Options see Chapter 17]	1	2	2	2	2	3	3	3	4	4	4
X-RAY UNIT, PORTABLE	1	1	1	1	1	1	1	1	1	1	1
Group 4											
Apron, lead-rubber	1	2	2	2	2	3	3	3	4	4	4
Gloves, lead-rubber, pair	1	2	2	2	3	3	3	3	4	4	4

26.10 Workshop

	Quantity
Group 1	
Board, notice	1
Board, key	1
Cupboard, storage	1
Lamp, angle poise	1
Socket outlet, 13A, switched, double [One socket outlet to be on a separate supply ring for use with the 300 mA mobile X-ray unit (Mob A)]	4
Telephone outlet	1
Worktop with cupboard under [2400 × 600 mm]	1
Group 3	
Cupboard, metal, lockable	1
Group 4	
Tool kit, radiological tests	1
Tools and sundries, X-ray workshop, allocation	1

Generally, items are shown throughout the list in rooms where they will normally be found in the Department. In addition, the items shown below relate to the department as a whole.

	Number of Radiodiagnostic rooms served										
	2	3	4	5	6	7	8	9	10	11	12
BEDDING AND LINEN											
Group 4											
Blanket, adult, single	20	30	40	50	60	70	80	90	100	110	120
Blanket, child	16	16	16	16	16	16	16	16	16	40	40
Gown, dressing, adult	24	36	48	60	72	84	96	108	120	132	144
Gown, dressing, child	20	20	20	20	20	20	20	20	20	45	45
Gown, X-Ray [or disposable]	200	300	400	500	600	700	800	900	1000	1100	1200
Pillowslip	36	54	70	88	106	124	140	158	176	194	210
Pillow, underslip	8	12	16	20	24	28	32	34	36	38	40
Sheet, adult, single	55	70	85	100	115	130	145	160	175	225	240
Sheet, cot	24	24	24	24	24	24	24	24	24	60	60
Towel, bath	3	5	6	8	9	11	12	14	15	17	18
Towel, tea, linen, heavy duty	5	8	10	13	15	18	20	23	25	28	30
GENERAL ITEMS											
Group 2											
Firefighting allocation A	1	2	3	4	5	6	7	8	9	10	11
Dispenser, paper cover, couch	1	1	1	1	1	1	1	1	1	1	1
Group 3											
IMAGE INTENSIFIER, MOBILE	3	3	3	3	3	3	4	4	4	4	4
Anaesthetic apparatus, Boyle, 4 cylinder, various gases	–	–	–	–	1	1	1	1	1	1	1
Dictating machine, portable pocket [with mains adaptor]	4	6	8	10	12	14	16	18	20	22	24
Flowmeter assembly, oxygen cylinder	2	2	2	2	4	4	4	4	4	4	6
Flowmeter assembly, pipeline single	–	–	–	–	2	2	2	2	2	2	2
RECORDER, VIDEO TAPE	–	–	1	1	1	1	1	1	1	1	1
Resuscitator, manual, Ambu type	1	1	1	1	1	1	1	1	1	1	1
Stand, infusion, twin hook, mobile	4	4	5	5	6	6	7	7	8	8	9
Suction unit, electric, mobile	1	1	1	1	1	1	1	1	1	1	1
Suction unit, pipeline high pressure, ward	–	–	–	–	2	2	2	2	2	2	2
Trolley, cylinder	1	1	1	1	2	2	2	2	2	2	3
Trolley, dressing/instrument, ss buffered [750 × 450mm]	2	2	2	2	3	3	4	4	5	5	5
Trolley, instrument ss [870 × 1050 × 600mm]	1	1	1	1	1	1	2	2	2	2	3
Trolley, resuscitation, complete	1	1	1	1	1	1	1	1	1	1	1
Trolley, video tape recorder	–	–	1	1	1	1	1	1	1	1	1
Ventilator, mechanical, cabinet, mobile	–	–	–	–	1	1	1	1	1	1	1
Group 4											
Airways, various	3	5	6	8	9	11	12	14	15	17	18
Books, allocation	1	1	1	1	1	1	1	1	1	1	1
Cassette, multi-section	1	1	1	2	2	2	2	2	2	2	2
Grid, stationary or gridded cassette [Selection of sizes]	3	6	6	9	9	9	12	12	12	15	15
Forceps, Magill	1	1	1	1	1	1	2	2	2	2	3
Forceps, tongue	1	1	1	1	1	1	2	2	2	2	3
Hammer, patella	1	1	1	1	1	1	2	2	2	2	3
Jar, receiving, suction unit	10	15	20	25	30	35	40	45	50	55	60
Lantern, battery operated	1	1	1	1	1	1	2	2	2	2	3
Laryngoscope	1	1	2	2	4	4	4	4	4	4	4
Mask, face anaesthetic											
– small	1	1	1	1	1	1	2	2	2	2	3
– medium	1	1	1	1	1	1	2	2	2	2	3
– large	1	1	1	1	1	1	2	2	2	2	3
Razor, safety	3	3	6	6	6	6	9	9	9	9	9
Receptacle, dentures	3	4	6	7	8	10	12	13	14	15	16
Sphygmomanometer	1	1	2	2	3	3	4	4	5	5	6
Spray, local anaesthetic, Rowbotham	1	1	2	2	3	3	4	4	5	5	6
Stethoscope	2	3	4	5	6	7	8	9	10	11	12

	Number of Radiodiagnostic rooms served										
	2	3	4	5	6	7	8	9	10	11	12
GENERAL ITEMS											
Group 4 (continued)											
Tray, instrument, 300 × 300 mm	1	1	1	1	1	1	2	2	2	2	3
Tray, instrument, 600 × 300 mm	1	1	1	1	1	1	2	2	2	2	3
Tray, instrument, 600 × 600 mm	1	1	1	1	1	1	2	2	2	2	3
CASSETTES, X-RAY FILM WITH RARE-EARTH (OR EQUIVALENT) SCREENS, DAYLIGHT											
18 cm × 24 cm [The mix of sizes is an example and final	6	12	12	12	18	18	24	24	24	24	30
20 cm × 40 cm choice will depend on local circumstances]	6	8	12	12	14	18	20	20	24	24	26
24 cm × 30 cm	12	18	24	27	33	39	45	45	51	54	60
30 cm × 40 cm	2	4	4	4	6	6	8	8	8	8	10
35 cm × 35 cm	8	8	16	16	16	16	16	16	20	20	20
35 cm × 43 cm	8	12	16	19	23	27	31	31	35	38	42
Total (all sizes)	42	62	84	90	110	124	144	144	162	168	188

27 Schedules of equipment: Additional accommodation

		CRC
27.1 Student radiographers		
27.1.1	Common room	81790
27.1.2	Staff changing, female	52930
27.2 Radiologist training facilities		
27.2.1	Reporting room	81800
27.2.2	Common room	81810
27.2.3	Study room	81820
27.2.4	Washroom/WC female staff	52600
27.2.5	Washroom/WC male staff	52610
27.3 Accident and emergency work		
27.3.1 – 27.3.4	Introduction	
27.3.5	Reception	73220 – 73230
27.3.6	Waiting area, ambulant patients	61890 – 61900
27.3.7	Changing cubicle	52940
27.3.8	Wheelchair and trolley waiting area	61910 – 61920
27.3.9	Single radiodiagnostic room	12980
27.3.10	Two-room radiodiagnostic department	12990
27.3.11	Daylight film processing/viewing/ dispensing area	21470
27.3.12	Mobile X-ray unit store	34770
27.3.13	**Departmental items**	92540 – 92570

27.1 Student radiographers

In hospitals undertaking the practical training of radiographers with theoretical work being carried out elsewhere some additional accommodation will be required (see Health Building Note No 6). Depending upon the extent to which the hospital undertakes the practical training of radiographers, is approved for the training of radiologists and the general training facilities available elsewhere in the hospital, it may be necessary to provide a common room and enlargement of the staff cloakrooms and sanitary facilities.

27.1.1 Common room

	Quantity
Group 1	
Magazine rack, 3 shelves, wall-mounted [1400 × 900 × 300mm]	1
Panel display, wall-mounted [1800 × 1200mm]	1
Socket outlet, 13A, switched, double	2
Track, window, curtain	1
Group 3	
Chair, easy, with open arms, high back	12
Chair, upright, stacking, with arms	13
Table, occasional, oblong with shelf [450 × 600 × 450mm]	2
Table [710 × 600 × 450mm]	2
Group 4	
Bin, waste paper	1
Curtain, window, fire retardant, pair	1
Decorative features	1

27.1.2 Staff changing without hand wash: female student radiographers

	Quantity
Group 1	
Bench seat[600 × 300mm]	1
Hook, hat and coat	2
Hook, hat and coat, four	1
Mirror, wall mounted [600 × 300mm]	1
Mirror, wall mounted [1500 × 400mm]	1
Shelf [300 × 150mm]	1
Track, window, curtain	1
Group 3	
Chair, upright, stacking	1
Locker, clothes, twin [1800 × 450 × 300mm]	10
Stand, hat, coat and umbrella, 20 hangers with security [1675 × 1800 × 600mm]	1
Trolley, soiled linen, single ring	1
Group 4	
Bin, waste paper	1
Curtain, window, fire retardant, pair	1

27.2 Radiologist training facilities

27.2.1 Reporting room

	Quantity
Group 1	
Light angle poise	2
Socket outlet, 13A, single, switched	4
Worktop	2
Group 2	
ILLUMINATOR, X-RAY FILM, QUADRUPLE [with spotlight facilities]	2
Group 3	
Chair, upright, stacking, with arms	2
Cupboard, stationery	1
Dictating machine, portable, pocket [with mains adaptor]	2

27.2.2 Common room

	Quantity
Group 1	
Panel display	1
Magazine rack	1
Socket outlet, 13A, switched, double	2
Track, window curtain	1
Group 2	
Chair, easy, open arms, high back	12
Chair, upright, stacking, with arms	13
Table, occasional, oblong, with shelf [450 × 600 × 450]	2
Table 710 × 1200 × 600 mm	2
Group 4	
Bin, waste paper	1
Curtain, window, fire retardant, pair	1
Decorative features, allocation	1

27.2.3 Study room

	Quantity
Group 1	
Panel display	1
Magazine rack	1
Socket outlet, 13A, switched, double	2
Group 2	
ILLUMINATOR, X-RAY FILM, QUADRUPLE [with spotlight facilities]	2
Group 3	
Chair, upright stacking, with arms	2
Table 710 × 1200 × 600 mm	2

27.2.4 Washroom WC/female staff 1.W.C.

	Quantity
Group 1	
Basin, medium, with plug [500 × 400 mm]	1
Holder, toilet roll, wall mounted	1
Hook, single, small, wall mounted	1
Mirror, wall mounted [600 × 300 mm]	1
Shelf melamine faced [300 × 150 mm]	1
Taps, pillar, H and C	1 pr
WC hospital type, general purpose, with cistern concealed [750 × 350 × 400 mm]	1
Group 2	
Dispenser, paper towel [BS 1439]	1
Dispenser, soap	1
Group 3	
Holder, sack, small foot operated, freestanding	1
Holder, sack, small, freestanding	1
Group 4	
Brush, WC, and holder	1

27.2.5 Washroom WC/male staff 1.W.C.

	Quantity
Group 1	
Basin, medium, with plug [500 × 400 mm]	1
Holder, toilet roll, wall mounted	1
Hook, single, small, wall mounted	1
Mirror, wall mounted [600 × 300 mm]	1
Shaver socket outlet	1
Shelf, melamine faced [300 × 150 mm]	1
Taps, pillar, H and C	1 pr
WC hospital type, adult, general purpose, with cistern concealed [750 × 350 × 400 mm]	1
Group 2	
Dispenser, paper towel [BS 1439]	1
Dispenser, soap	1
Group 3	
Holder, sack, small, freestanding	1
Group 4	
Brush, WC, and holder	1

27.3 Accident and emergency work

The following provides guidance on the equipping of additional radiodiagnostic rooms for Accident and Emergency work where a case can be made for their provision (see paragraph 25.6). Whether one or two additional rooms will be required will depend on circumstances—two rooms will be exceptional and be associated only with the largest Accident and Emergency Departments. Supporting areas such as waiting facilities, records etc will normally form part of the Accident and Emergency Department. The radiodiagnostic rooms should normally form part of the radiological department ie the latter will be in close proximity to the Accident and Emergency Department and the Accident and Emergency radiological facilities will be suitably segregated from the remainder of the department to allow it to function as a self-contained radiological facility when the remainder of the department may be closed outside normal working hours.

It is assumed that life support apparatus together with patient measuring/monitoring equipment will be brought into all radiodiagnostic rooms from the Accident and Emergency Department.

27.3.1 Processing/viewing/dispensing area

As indicated in paragraph 27.3 the additional radiodiagnostic room(s) devoted to Accident and Emergency work will normally be part of the main radiological department. It may be practicable to make use of one of the processing/viewing/dispensing areas of the main department to process films arising from Accident and Emergency work provided this processing facility is available for Accident and Emergency work when the main department is closed outside normal working hours and provided that such a sharing arrangement does not excessively delay the processing of emergency films. However it will more often be better to provide a processing/viewing/dispensing area dedicated to Accident and Emergency work in association with the additional Accident and Emergency radiodiagnostic room(s). This will certainly be the case where two additional rooms have been justified. The recommended schedule for equipping any processing/viewing/ dispensing area is that given in 26.3.30 with silver recovery as given in 26.3.32. For convenience the detail is reproduced at 27.3.11.

27.3.2 X-ray film cassettes with screens

Recommendations for provision of cassettes with screens in the main part of a radiological department are given in 26.3.47 and this provision will need to be increased to cater for the work in any additional room(s) for Accident and Emergency work. Generally the extra provision will be as given in 26.3.47 for two radiodiagnostic rooms where two Accident and Emergency rooms are provided and half this quantity where one room is provided. The mix of sizes will depend on local circumstances. The extra provision has been included in the Accident and Emergency room(s) as appropriate at 27.3.9 and 27.3.10.

27.3.3 Mobile X-Ray units

Depending on its size one or two mobile X-ray units will need to be located in the Accident and Emergency Department.

27.3.4 Departmental items

Paragraph 26.3.47 deals with the provision of departmental items for radiodiagnostic departments of various sizes. This provision will need to be increased to take account of any associated Accident and Emergency radiodiagnostic rooms and provision is made in 27.3.13 for the necessary items.

27.3.5 Accident and Emergency Reception

	Number of radiodiagnostic room served 1	2
Group 1		
Cupboard on plinth, 2 shelves, lockable	1	–
Departmental intercom	1	–
Drawer-unit on plinth, 2 drawer, lockable	1	–
Drawer unit on plinth, 6 drawer, with cut away front	4	–
Fire bell, muting switch	1	–
Front panel, with plinth insert	1	–
Hatch sliding, horizontal glass with track and lining	1	–
Patient/Staff call indicator light and buzzer	1	–
Pigeon hole unit [200 × 1800 × 200mm]	1	–
Pigeon hole unit, with telephone outlet plate	1	–
Roller shutter, lockable	1	–
Socket outlet, 13A, switched, double	1	–
Socket outlet, 13A, switched, single	1	–
Telephone outlet, internal line outside line	1	–
Group 3		
Desk, typist	1	–
Chair, adjustable [450 – 550mm]	1	–
Chair, adjustable [500 – 625mm]	1	–
Cabinet card index, 9 double drawer [card 150 × 229mm]	5	11
Typewriter electric	1	–
Group 4		
Dispenser adhesive tape, four colours	1	–
Tray, incoming X-ray film	1	–
Tray, correspondence	2	2

27.3.6 Accident and Emergency waiting area: Ambulant patients

	Number of radiodiagnostic room served 1	2
Group 1		
Clock	1	–
Socket outlet 13A, switched single	1	1
Panel display, wall mounted [800 × 1200mm]	1	1
Patient/Nurse call push reassurance lamp and reset unit	1	1
Track, window curtain	1	1
Group 3		
Chair, upright, stacking	4	4
Chair, semi easy, unit type	3	3
Table, occasional [400 × 600 × 600mm]	1	1
Group 4		
Bin, waste paper	1	1
Curtain, window, fire retardant, pair	1	1
Decorative features, general allocation	1	1

27.3.7 Accident and Emergency Changing Cubicle

The following is required for each cubicle

[Dressing gowns often provided in these cubicles are shown under Departmental items]

	Quantity
Group 1	
Hook, single large, wall mounted	1
Mirror, wall mounted	1
Rail grab, horizontal, wall mounted [900mm]	1
Seat, wall mounted [900 × 450mm]	1
Shelf [300 × 150mm]	1

27.3.8 Accident and Emergency: Wheelchair/trolley waiting area

	Number of radiodiagnostic room served 1	2
Group 1		
Cupboard on plinth melamine faced and lined, 2 shelves, lockable	1	1
Hook, single, small, wall mounted	2	2
Oxygen outlet, wall mounted	2	2
Patient/Nurse call, extender, pear push	2	2
Socket outlet, 13A, switched double	4	4
Suction outlet, wall mounted	2	2
Track, cubicle screening	2	2
Group 4		
Cup, feeding	1	1
Curtain, partition, fire retardant	2 pr	2 pr
Pillow	2	2
Sphygmomanometer	1	1
Stethoscope	1	1
Tray instrument	3	3

27.3.9 Accident and Emergency: Single radiodiagnostic room:

	Quantity
Group 1	
Basin, medium no plug	1
Clip, equipment, 12, wall mounted	1
Clock with sweep second hand	1
Cupboard with 2 shelves melamine faced [700 × 1200 × 500mm] under work top	2
Departmental intercom	1
Dimmer [for room lights]	1
Fused spur unit 13A, switched indicating	3
Hook, hat and coat 2	1
Mains isolator, with easy action lever [for X-Ray equipment	1
Nitrous oxide outlet, wall mounted	2
Oxygen outlet wall mounted	2
Panel display, wall mounted [800 × 600mm]	1
Patient/Staff call push reassurance lamp and reset unit	1
Plinth [for cupboard]	2
Radiation warning light [to be provided at each entry]	1
Rail, clinical equipment, stainless steel, wall mounted	4
Shelves melamine faced [1200 × 600mm]	2
Socket outlet, 13A, switched double	10
Staff/staff emergency call outlet to main A/E Dept	1
Suction outlet, wall mounted	2
Taps mixer, wall mounted, elbow action H and drinking	1
Telephone, wall mounted	1
Track, window curtain [or venetian blinds]	1
White board, wall mounted	1
Worktop, melamine faced [1200 × 600mm]	2
RACK PROTECTIVE APRON FOUR, WALL MOUNTED	1
FITMENT, PEGS, LEAD-RUBBER GLOVES, TWO PAIR, WALL MOUNTED	1
FITMENT, RAIL GONAD SHIELD, WALL MOUNTED	1
SCREEN, HINGED OR CUBICLE, PROTECTIVE WITH VIEWING WINDOW	1
Group 2	
Blanket, fire and container [370 × 525 × 95mm]	1
Dispenser, paper cup	1
Dispenser, paper towel [BS 1439]	1
Dispenser, soap	1
ILLUMINATOR X-RAY FILM, DOUBLE, WALL MOUNTED [with spot light]	2
Group 3	
BOX CASSETTE, STORAGE MOBILE	1
CABLES, HV, X-RAY TUBE, PAIR	2
CABLES, HV, SUPPORT	2
CHAMBER IONISATION	3
GENERATOR, HV, WITH STATOR CONTROL AND AUTOMATIC EXPOSURE CONTROL	1 (GenD)
MARKER, X-RAY FILM, DAYLIGHT	1
RADIOLOGICAL EQUIPMENT INTERFACE ALLOC-RADIOGRAPHIC	1
SKULL X-RAY UNIT	1 (SkB)
STAND CHEST/VERTICAL WITH CASSETTE HOLDER FOR FRONT FACE [with compression band]	1 (ChB)
TABLE, RADIOGRAPHIC WITH CASSETTE HOLDER LATERAL [Preferably with facility to drive to low level.]	1 (RtB)
TROLLEY, PATIENT TRANSFER, ACCIDENT AND EMERGENCY [With compression band see chapter 16 and additional list below.]	6 (A&E A)
TUBE, X-RAY, HIGH SPEED	2
TUBE, X-RAY, SUPPORT [with ceiling tracks as appropriate	1 (TsB)
WARNING LIGHT, TUBE SELECTION	1
Chair, upright, stacking	2
Holder, sack, medium, freestanding	1
Stand, infusion, twin hook, mobile	2
Trolley, dressing/instrument, s.s. buffered [450 × 450mm]	2

	Quantity
Group 4	
Airways, various	6
Apron, lead rubber	4
Curtain, window, fire retardant, pair	1
Forceps, Magill	1
Forceps, tongue	1
Gloves, lead rubber, pair	2
Holder, mechanical stop clock, equipment rail	2
Holder, sphygmomanometer, equipment rail	2
Jar, receiver, suction, equipment rail	4
Laryngoscope	1
Lead rubber cassette masking, allocation	1
Marker, film set	1
Measure, tape 1800mm	1
Overlay foam, X-Ray with plastic cover	1
Oxygen giving set	2
Pillow	2
Positioning Aids, set	1
Rule, plastic, 450mm, graduated	1
Sand bag	4
Shield, gonad, set	1
Sphygmomanometer	2
Stethoscope	2

	Quantity
Stop clock	2
Tray	2
Tourniquet	2
CASSETTES, X-RAY FILM, WITH RARE EARTH (OR EQUIVALENT) SCREENS, DAYLIGHT [The mix of sizes is an example and final choice will depend on local circumstances	
18cm × 24cm	3
20cm × 40cm	3
24cm × 30cm	1
30cm × 40cm	6
35cm × 35cm	4
35cm × 43cm	4
Additional List:	
Group 3	
TROLLEY, PATIENT TRANSFER, ACCIDENT AND EMERGENCY [In lieu of 6 of A&E A to be justified according to local policy—see chapter 16.]	6 (A&E B)
TABLE RADIOGRAPHIC [In lieu of RtB]	1 (RtD)
TOMOGRAPHY ATTACHMENT	1 (TomA)

27.3.10 Accident and Emergency Two radiodiagnostic rooms

	Number of radiodiagnostic room served 1	2
Basic List		
Group 1		
Basin, medium, no plug	1	1
Clip, equipment, 12, wall mounted	1	1
Clock, with sweep second hand	1	1
Cupboard with 2 shelves, melamine faced [700 × 1200 × 500mm under worktop]	2	2
Departmental intercom	1	1
Dimmer [for room lights]	1	1
Fused spur unit, 13A, switched, indicating	3	3
Hook, hat and coat, 2	1	1
Mains isolator, with easy action lever [for X-ray equipment 800 × 600mm]	1	1
Nitrous oxide outlet, wall mounted	2	2
Oxygen outlet, wall mounted	2	2
Panel display, wall mounted	1	1
Patient/staff call push reassurance lamp and reset unit	1	1
Plinth [for cupboard]	2	2
Radiation warning light [to be provided at each entry]	1	1
Shelves, melamine faced [1200 × 600mm]	2	2
Rail, clinical equipment, stainless steel, wall mounted	4	4
Socket outlet, 13A, switched, double	10	10
Staff/staff emergency call [outlet to main A & E Department]	1	1
Suction outlet, wall mounted	2	2
Taps, mixer, wall mounted elbow action H and drinking	1 pr	1 pr

	Number of radiodiagnostic room served 1	2
Telephone, wall mounted	1	1
Track, window curtain [or venetian blinds]	1	1
Whiteboard, wall mounted [800 × 600mm]	1	1
Worktop melamine faced [1200 × 600mm]	2	2
RACK, PROTECTIVE APRON, FOUR, WALL MOUNTED	1	1
FITMENT, PEGS, LEAD-RUBBER GLOVES, TWO PAIRS, WALL MOUNTED	1	1
FITMENT, RAIL, GONAD SHIELD, WALL MOUNTED	1	1
SCREEN, HINGED OR CUBICLE, PROTECTIVE WITH VIEWING WINDOW	1	1
Group 2		
Blanket, fire and container [370 × 525 × 95mm]	1	1
Dispenser, paper cup	1	1
Dispenser, paper towel [BS 1439]	1	1
Dispenser, soap	1	1
ILLUMINATOR X-RAY FILM, DOUBLE, WALL MOUNTED [with spot-light facility]	2	2

	Number of radiodiagnostic room served 1	2
Group 3		
BOX CASSETTE, STORAGE, MOBILE	1	1
CABLES, HV, X-RAY TUBE, PAIR	2	1
CABLES, HV, SUPPORT	2	1
Chair, upright, stacking	2	2
Holder, sack, medium, freestanding	1	1
Stand, infusion, twin hook, mobile	2	2
Trolley, dressing/instrument, s.s. buffered [450 × 450mm]	2	2
CHAMBER IONISATION	3	2
GENERATOR, HV, WITH STATOR CONTROL AND AUTOMATIC EXPOSURE CONTROL	1 (GenC)	1 (GenD)
MARKER X–RAY FILM DAYLIGHT	1	1
RADIOLOGICAL EQUIPMENT INTERFACE ALLOC–RADIOGRAPHIC	1	1
SKULL X-RAY UNIT	1 (SkB)	–
STAND CHEST/VERTICAL WITH CASSETTE HOLDER FOR FRONT FACE [with compression band]	1 (ChB)	1 (ChC)
TABLE, RADIOGRAPHIC WITH CASSETTE HOLDER LATERAL [Preferably with facility to drive to low level]	1 (RtB)	1 (RtB)
TROLLEY, PATIENT TRANSFER, ACCIDENT AND EMERGENCY [See chapter 16 and additional list below. With compression band]	6 (A&E A)	6 (A&E A)
TUBE, X-RAY, HIGH SPEED	2	1
TUBE, X-RAY, SUPPORT [with ceiling tracks as appropriate]	1 (TsB)	1 (TsB)
WARNING LIGHT, TUBE SELECTION	2	–
Group 4		
Airways, various	6	6
Apron, lead rubber	4	4
Curtain, window, fire retardant, pair [or venetian blinds]	1	1
Forceps, Magill	1	1
Forceps, tongue	1	1
Holder, mechanical stop clock, equipment rail	2	2
Holder, sphygmomanometer, equipment rail	2	2
Jar, receiver, suction, equipment rail	4	4
Laryngoscope	1	1
Lead rubber cassette masking, allocation	1	1
Marker, film, set	1	1
Measure, tape, 1800mm	1	1
Overlay foam, X-ray with plastic cover	1	1
Oxygen giving set	2	2
Pillow	2	2
Positioning aids, set	1	1
Rule, plastic, 450mm, graduated	1	1
Sandbag	4	4
Shield, gonad, set	1	1
Sphygmomanometer	2	2
Stethoscope	2	2
Stop clock	2	2
Tray	2	2
Tourniquet	2	2
CASSETTES, X-RAY FILM, WITH RARE EARTH (OR EQUIVALENT) SCREENS, DAYLIGHT [The mix of sizes is an example and final choice will depend on local circumstances]		
18cm × 24cm	3	3
20cm × 40cm	3	3
24cm × 30cm	6	6
30cm × 40cm	1	1
35cm × 35cm	4	4
35cm × 43cm	4	4
Additional List		
Group 3		
TROLLEY, PATIENT TRANSFER, ACCIDENT AND EMERGENCY [In lieu of 12 of A&E A to be justified according to local policy – see chapter 16.]	6 (A&E B)	6 (A&E B)
TABLE RADIOGRAPHIC [In lieu of RtB]	1 (RtD)	1 (RtD)
TOMOGRAPHY ATTACHMENT	1 (TomA)	1 (TomA)

27.3.11 Daylight film processing/view/dispensing

	Quantity
Basic List	
Group 1	
Cable outlet	1
Departmental intercom	1
Drainer [700 × 450mm]	1
Drainage connection [Of sufficient diameter to discharge the effluence of the processor]	1
Exhaust duct, lagged and cased	1
Fused spur unit, 13A, switched, wall mounted	1
Fused spur unit, 13A, switched, single indicating	1
Hook, hat and coat, 2	1
Mains isolator 20A, SP & N	1
Panel display, wall mounted	1
Rack, sorting, X-Ray films	1
Shelf [600 × 400mm]	2
Sink, London [250 × 750 × 500mm]	1
Socket outlet, 13A, switched, double	1
Socket outlet, 13A, switched, single [Plus one for each daylight dispensing if provided]	2
Taps, bib, mixer with nozzle union H and C	1 pr
Water economy/mixer unit, wall mounted [As specified by processor supplier]	1
Worktop, linoleum faced [1600 × 500mm]	1
Worktop, removable [1200 × 600mm]	1
Group 2	
Dispenser, paper towel	1
ILLUMINATOR, X-RAY FILM, TRIPLE, WALL MOUNTED [with spot light facility]	1
ILLUMINATOR, X-RAY FILM, BENCH MOUNTED, INSET	1

	Quantity
Group 3	
Holder, sack, medium freestanding	1
Stool, adjustable	1
AUTOMATIC CHEMICAL MIXER	1
ADAPTOR, DAYLIGHT UNLOADER, X-RAY FILM	1
DISPENSER, DAYLIGHT, X-RAY FILM [Each for a different size (or one dispenser assembly dispensing a range of film sizes)]	4
PROCESSOR, X-RAY, AUTOMATIC [See paragraph 26.3.26]	1(ProcA) 1(ProcB)
SILVER RECOVERY UNIT, ELECTROLYTIC	1
TRANSFER UNIT, SILVER RECOVERY [with "unit fail" high level light, wall mounted]	1
Group 4	
Bin, waste paper	1
Guillotine, small	1
Magnifying glass	1
Rack, stationery	1
Additional List	
Group 3	
COMBINED DAYLIGHT DISPENSE/UNLOAD UNIT ATTACHED TO X-RAY PROCESSOR [In lieu of separate dispensers and daylight unloading adaptor for processor if justified (see paragraph 20.7). To handle a minimum of four different sizes]	1

27.3.12 Accident and Emergency Storage: Mobile X-Ray Unit

	Quantity
Group 1	
RACK, PROTECTIVE APRON, FOUR, WALL MOUNTED	1
FITMENT PEGS, LEAD RUBBER GLOVES, TWO PAIRS, WALL MOUNTED	1
Socket outlet 13A, switched single	1
Group 3	
X-RAY UNIT, MOBILE [See paragraph 25.1 for options see Chapter 17]	1

	Quantity
Group 4	
Apron, lead rubber	1
Gloves, lead rubber, pair	1

27.3.13 Accident and Emergency: Departmental Items

	Number of radiodiagnostic room served 1	2
BEDDING AND LINEN		
Group 4		
Blanket, adult, single	10	10
Blanket, child	8	8
Pillow slip	18	18
Pillow underslip	15	15
Sheet, adult, single	16	16
Sheet, cot	12	12
Gown, dressing, adult	12	12
Gown, dressing, child	10	10
Gown, X-ray [or disposable]	100	100
Towel, bath	1	2
Towel, tea, linen, heavy duty	2	3
GENERAL ITEMS		
Group 2		
Fire fighting, allocation	1	1
Dispenser, paper couch cover	1	1
Group 3		
Flowmeter assembly, oxygen cylinder	1	1
Flowmeter assembly, pipeline, single	1	1
Monitor, ECG, Heart rate, single channel [where justified]	1	–
Monitor, ECG, Heart rate, double channel [where justified]	1	–
Monitor, Blood pressure, Heart rate [where justified]	1	–
Recorder, ECG, Blood pressure, Heart rate	1	–
Resuscitator, manual, Ambu type	–	1
Suction unit, pipeline, high pressure ward	2	2
Transducer, Physiological Pressure	1	–
Trolley resuscitation, complete [where justified]	1	–
Trolley, cylinder	1	1
Trolley, dressing/instrument s.s. [750 × 450 mm]	1	1
Trolley, solied linen, double ring	1	1
Group 4		
Airways	1	2
Forceps, Magill	1	1
Forceps, tongue	1	1
Grid stationary or/and gridded cassette	2	1
Hammer, patella	1	1
Laryngoscope	1	1
Mask, face, anaesthetic		
– small	1	1
– medium	1	1
– large	1	1
Receptacle, denture	5	5
Sphygmonanometer	1	1
Spray, local anaesthetic, Rowbotham	1	1
Stethoscope	1	1
Torch, rubber	1	1

28 British Standards

Guidance is given below on the British Standards which may be relevant to certain items in this Equipment Note. The Department of Health and Social Security has for many years emphasised in its guidance the importance of buying to British Standards when these exist. However, it is not the intention to imply that an item in a material other than that to which the British Standard relates is necessarily inappropriate.

Group	Item	BS
1	Cupboard, controlled drugs with warning light	2881
2	Cooker, electric	3456 (2.1)
	Dispenser, paper towel	1439
3	Cabinet filing	4438
	Chair typist's	3893
	Couch, examination	2838
	Desk, office	3893
	Desk typist's	3893
	Dry suction machine, domestic	3028
	Dry suction machine, industrial	5415 (2.2)
	Kettle electric	5456 (2.3)
	Ladder step	1893
	Refrigerator	922/3435(c)
	Scrubber/polisher	3435 (2.20)
	Stand infusion	3619
	Stool adjustable surgeon's	3622
	Toaster	3436 (2.6)
	Trolley cylinder	2718
	Trolley dressing	4068
	Trolley medicine	5853
	Trolley patient	1962
	Trolley soiled linen	2854
	Typewriter	2481
	Wheelchair folding, attendant propelled	5568
4	Apron, lead rubber	3783
	Blanket	4984/5866 (1)
	Cutlery	4038
	Gloves lead, rubber	2606
	Mops	2764
	Pillow	1899/5223
	Pillow slip	PAS17
	Pliers	3087
	Saucepan, aluminium	1859
	Screw driver	2559
	Sheets	PAS17
	Sphygmomanometer	2743/4
	Towel	PAS19

29 Acknowledgements

The Radiological Equipment Sub-committee (RESC) of the DHSS Radiological Advisory Committee (RAC) set up a small topic group to advise the DHSS on the content of this Equipment Note. The membership of the topic group is given below and acknowledgement is made of the assistance received by the group from a number of Specialists who attended some meetings to advise on particular topics.

Dr G A Burfield (Chairman)
Dr P G Keates
Miss D N Chesney
Mr G W De la Haye
Mr O A McCabe (DHSS)
Mr R Montgomery (CSA, Scotland)
Mr R T Rogers (DHSS Technical Secretary)
Mr K W Selby (DHSS General Secretary)

Specialists who assisted:

Dr A A Donaldson
Dr R G Grainger
Dr Patricia Morley
Dr N Slark

Appendix A: Base-line data

A.1 Introduction

In planning the provision of radiological services Health Authorities will need to assess potential demand and relate this to the provision of buildings, staffing and equipment. For this purpose certain base-line data will be required ideally drawn from the locality where services will be provided. However some broad national guidelines may be useful and the following is provided with that in mind. Data has been compiled from a number of sources and individuals and is regarded as sufficiently representative to allow modification according to local circumstances. The breakdown of the type and number of examinations of various types expected to arise from a general population has been taken from a National Radiological Protection Board report of a National survey conducted in 1977 to assess radiation dose from radiology ("A Frequency Survey of Radiological Examinations carried out in NHS Hospitals in Great Britain in 1977 for Diagnostic Purposes" NRPB – R104 June 1980) It has been examined against other surveys undertaken within the NHS and all such data has been found to be in close agreement.

A.2 Number of radiodiagnostic rooms: HBN6 formula

Health Building Note No 6 gives guidance on the means for calculating the number of radiodiagnostic rooms required to serve a particular catchment population. The following summarises that guidance:

- 1977 national average norm for radiological examinations per thousand of the population: 350 per thousand
- national average for annual increase in examinations: 5% per annum
- average number of examinations per radiodiagnostic room averaged over high and low capacity rooms: 6000 – 7500 pa (based on a 5-day week, 8-hour day, 50-week year)

Health Building Note No 6 emphasises the need to relate these broad averages to local circumstances.

A.3 Type of examinations

Table A.1 gives a breakdown in percentage terms of the different types of examination which can be expected to arise from a general population and is divided into purely radiographic examinations and those for which fluoroscopy is involved. The data is drawn from the NRPB report referred to in para A.1 (for Great Britain).

For the purpose of assessing, for a general population, the number of examinations which will arise in relation to a particular type of radiodiagnostic room or equipment it is useful to band examinations into smaller groupings. Table A.2 should be useful in that context.

Obviously the percentage breakdown of examinations will depend on local circumstances and departures from those given in the table will be more obvious the smaller the population concerned. Also the distribution may generally change with time and introduction of new techniques. For example chest examinations are a smaller proportion now than in 1957 when the Adrian Survey was conducted (Radiological Hazards to Patients – Second Report of the Committee 1960, HMSO). Also angiograms of the head have decreased because of CAT scanning. It should also be noted that the data for dental examinations relates only to those undertaken in association with hospital radiodiagnostic departments. Introduction of ultrasonic or radioisotope imaging equipment can also significantly alter the pattern of work.

A.4 Number of examinations in relation to radiodiagnostic rooms and equipment

One difficulty in planning is the assessment of a reasonable examination capacity for particular equipment or radiodiagnostic rooms. Health Building Note No 6 suggests an average of between 6,000 – 7,500 examinations per room averaged over rooms with wide differences of capability. Data for particular equipment assemblies/rooms are not readily available for the UK although there is a reasonable amount of information in the literature from sources overseas. Obviously the work-load of any particular room will depend on many circumstances eg staffing, porters, ambulance service, mix of examinations, in-patient to out-patient ratio etc. However Table A.3 (based on limited UK data) should provide a reasonable starting point provided the immense difficulties of being precise are fully recognised. The work-load figures assume a service of about a 5-day week, 8-hour day, 50-week year (as in Health Building Note No 6 see paragraph A.2).

A.5 Age distribution

For some purposes eg for facilities related to paediatric or geriatric patients, some idea of the number of examinations expected for a particular age group may be required. Table A.4, based on the National Radiological Protection Board survey noted in paragraph A.1, gives a percentage breakdown of examinations related to age group (for Great Britain).

Table A.1 *Percentages of various examination types from a general population: detail*

Examination type	% of all radio-graphic	% of all fluoro-scopic	% of all (radio-graphic and fluoro-scopic)
Abdomen	4.2	2.6	4.1
Abdomen, Obstetric & Pregnant	0.2	0.0	0.2
Angiograph, Abdomen	0.0	1.5	0.1
Angiograph, Chest	0.0	1.0	0.1
Angiograph, Head	0.1	0.4	0.1
Angiograph, Peripheral	<0.1	1.7	0.1
Lower Leg and Foot	13.7	0.9	13.0
Arm, below Elbow	9.8	0.2	9.2
Elbow	1.7	0.3	1.6
Arm, Upper	0.5	<0.1	0.4
Ba Meal, Stomach & Duodenum	0.0	38.1	2.2
Ba Meal, Follow Through	0.0	4.9	0.3
Ba Enema	0.0	21.0	1.2
Ba Swallow	0.0	6.2	0.4
Bronchograph	<0.1	<0.1	<0.1
Cardiac Catheterisation	0.0	1.6	0.1
CAT Scan	0.3	0.0	0.3
Cervical Spine	3.0	0.1	2.8
Chest, Heart and Lungs	34.6	3.7	32.8
Cholangiograph, Intravenous	0.1	0.1	0.1
Cholangiograph, Operative	0.1	0.4	0.1
Cholangiograph, Percutaneous	0.0	0.3	<0.1
Cholecystograph, Oral	1.5	2.0	1.6
Cholecystograph, Intravenous	0.1	<0.1	0.1
Clavicle	2.5	<0.1	2.3
Cystograph	0.1	1.9	0.2
Dacrocystograph	<0.1	0.0	<0.1
Dental, Routine	1.0	<0.1	0.9
Dental, Pantomograph	0.8	0.0	0.8
Dorsal Spine	1.3	0.2	1.2
Femur, Upper Third and Hip	2.5	1.0	2.4
Femur, Middle and Lower Thirds	1.7	0.9	1.7
Head	8.2	0.6	7.8
Hysterosalpingograph	0.0	1.9	0.1
Xerogram	<0.1	0.0	<0.1
Intravenous Urograph	2.2	3.2	2.3
Lumbar Spine	3.1	0.2	2.9
Lumbar Sacral Area	1.8	0.2	1.7
Myelograph, Lumbar	0.0	2.1	0.1
Mammograph	0.2	0.0	0.2
Pelvis	4.2	0.4	4.0
Tomograph, Abdomen	0.1	0.1	0.1
Tomograph, Bones	<0.1	0.0	0.1
Tomograph, Chest and Lungs	0.1	0.1	0.1
Tomograph, Head	0.1	0.1	0.1
Myelograph, Cervical	0.0	0.1	0.1
Lymphangiograph	0.1	0.1	0.1
Total	100.0	100.0	100.0

Table A.2 *Percentage of various examinations from a general population: broad bands*

Examination type	% of all examinations
'Pure' radiographic	
Chest, heart and lung	32.6
Head	7.8
IVP and IVU	2.1
Dental, routine	0.9
Dental, pantomograph	0.8
Tomography	0.4
All others	49.6
All 'pure' radiographic	94.2
Fluoroscopic	
Barium meal, enema and swallow	4.1
Abdomen; cystograph; chest, heart and lung; hysterosalpingograph; cholecystograph, IVU and IVP	0.9
Angiograph; abdomen, chest, peripheral, head	0.3
Limbs	0.2
Myelograph	0.1
Cardiac catheterization	0.1
All others	0.1
All fluoroscopic	5.8

Table A.3 *Work-load capacity of various equipments/rooms*

Room/equipment type	Work-load capacity: Examinations per year
General radiographic room (say radiographic 'Bucky' table, tomography attachment and chest stand)	8,000 to 12,000
General fluoroscopic room (say general fluoroscopic table with automated serial changer) not undertaking significant number of myelographic or endoscopic examinations	3,500 to 4,200
IVU room (say two radiographic tables each with tomographic attachment)	3,000 to 3,300
Dedicated chest radiographic room (say automated cassetteless chest unit with attached processor)	20,000 to 25,000
Angiographic room (say angiographic fluoroscopic table or C or U arm with single plane rapid film-changer)	1,000 to 1,500
Ultrasonic room (say static B scan)	3,000 to 4,000

Table A.4 *Percentage breakdown of examinations related to age groups*

Age group	*% of all examinations*
0 – 1	1.6
2 – 4	2.0
5 – 9	4.0
10 – 14	6.1
15 – 19	6.3
20 – 24	6.1
25 – 29	5.4
30 – 39	11.1
40 – 49	11.6
50 – 59	14.6
> 60	31.2

Library and Information Service
Polytechnic of North London
Holloway Road
London N7 8DB

Printed in England for Her Majesty's Stationery Office
by Hobbs the Printers of Southampton
(618) Dd717656 C25 7/82 G381

DHSS
Welsh Office
Scottish Home and Health Department

Prices do not include postage
Department of Health and Social Security, Welsh Office and Scottish Home and Health Department hospital guidance publications include: Health/ Hospital Building Notes, Equipment Notes and Technical Memoranda

Government publications can be purchased from HMSO Bookshops in London (post orders to PO Box 569, SE1 9NH), Edinburgh, Cardiff, Belfast, Manchester, Birmingham and Bristol or through booksellers

Health/Hospital Building Notes

4	Ward units (revised 1968)	£1
12	Out-patient department	95p
15	Pathology department (revised 1973)	£3
24	Residential accommodation for staff	21p
25	Laundry (revised 1977)	£1.50
26	Operating department	£1.15
27	Intensive therapy unit	£1.25
28	Dental department of the out-patient department	15p
34	Works department for District General Hospitals and Teaching Hospitals	60p
37	Hospital Accommodation for Elderly People	£3.75
38	Accommodation for Adult Acute Day Patients	£3.30

Health/Hospital Equipment Notes

1	Equipping a hospital building	20p
4	Ward units (Revised 1971)	95p
10	Kitchens	85p
11	Dining rooms	60p
14	Training school for nurses	15p
16	Boiler house and steam boiler plant	38p
20	Mortuary and post-mortem room	90p
21	Maternity department	£2
23	Children's ward	85p
25	Laundry	£1.50
28	Dental department of the out-patient department	30p
29	Pharmaceutical department	48p
37	Hospital Accommodation for Elderly People	£6.00
38	Accommodation for Adult Day Patients	£3.10

HER MAJESTY'S STATIONERY OFFICE

Government Bookshops

49 High Holborn, London WC1V 6HB
13a Castle Street, Edinburgh EH2 3AR
41 The Hayes, Cardiff CF1 1JW
Brazennose Street, Manchester M60 8AS
Southey House, Wine Street, Bristol BS1 2BQ
258 Broad Street, Birmingham B1 2HE
80 Chichester Street, Belfast BT1 4JY

Government publications are also available through booksellers

© Crown copyright 1982
First published 1962
Revised Edition 1975
New Edition 1982

CI/SfB
4171/(7-)/ /

ISBN 0 11 320781 6